User Manual

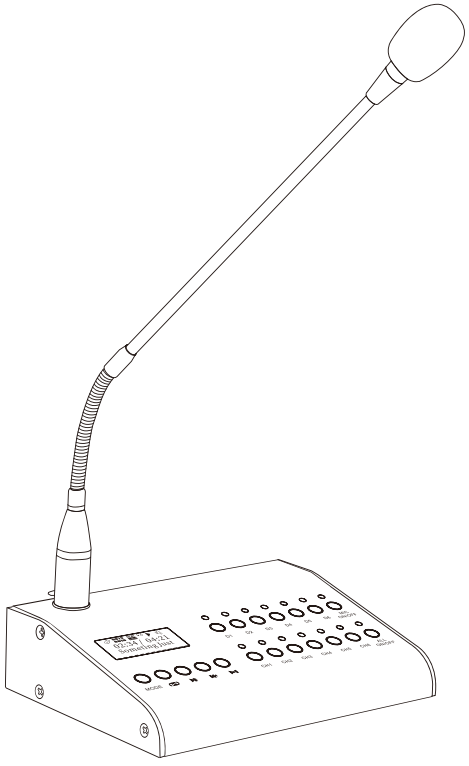

6X6 REMOTE MICROPHONE

Thank you for purchasing **the 6x6 Remote Microphone**

Please carefully follow the instructions in this manual to ensure long, trouble-free use of the equipment.

Packaging Contents

Microphone 1
User manual 1
AC power adapter.....1

SAFETY PRECAUTIONS

Be sure to read the instructions in this section carefully before use.

Make sure to observe the instructions in this manual as the conventions of safety symbols and messages regarded as very important precautions are included.

We also recommend you keep this instruction manual handy for future reference.



The lightning flash with arrowhead symbol, within an equilateral triangle, is intended to alert the user to the presence of uninsulated "dangerous voltage" within the product's enclosure that may be of sufficient magnitude to constitute a risk of electric shock to persons.



The exclamation point within an equilateral triangle is intended to alert the user to the presence of important operating and maintenance (servicing) instructions in the literature accompanying the appliance.

WARNING

When Installing the Unit

Do not expose the unit to rain or an environment where it may be splashed by water or other liquids,as doing so may result in fire or electric shock.

Use the unit only with the voltage specified on the unit. Using a voltage higher than that which is specified may result in fire or electric shock.

Do not cut, kink, otherwise damage nor modify the power supply cord. In addition, avoid using the power cord in close proximity to heaters, and never place heavy objects -- including the unit itself -- on the power cord, as doing so may result in fire or electric shock.

Be sure to replace the unit's terminal cover after connection completion. Because high voltage is applied to the speaker terminals, never touch these terminals to avoid electric shock.

Be sure to ground to the safety ground (earth) terminal to avoid electric shock. Never ground to a gas pipe as a catastrophic disaster may result.

Avoid installing or mounting the unit in unstable locations, such as on a rickety table or a slanted surface. Doing so may result in the unit falling down, causing personal injury and/or property damage.

When the Unit is in Use

※ Should the following irregularity be found during use,immediately switch off the power,disconnect the power supply plug from the AC outlet and contact your nearest dealer.Make no further attempt to operate the unit in this condition as this may cause fire or electric shock.

·If you detect smoke or a strange smell coming from the unit.
·If water or any metallic object gets into the unit.
·If the unit falls, or the unit case breaks.
·If the power supply cord is damaged (exposure of the core, disconnection, etc.)
·If it is malfunctioning (no tone sounds.)

※ To prevent a fire or electric shock, never open nor remove the unit case as there are high voltage components inside the unit. Refer all servicing to your nearest dealer.

※ Do not place cups, bowls, or other containers of liquid or metallic objects on top of the unit. If they accidentally spill into the unit, this may cause a fire or electric shock.

※ Do not insert nor drop metallic objects or flammable materials in the ventilation slots of the unit's cover, as this may result in fire or electric shock.

CAUTION

When Installing the Unit

※ Never plug in nor remove the power supply plug with wet hands, as doing so may cause electric shock.

※ When unplugging the power supply cord, be sure to grasp the power supply plug; never pull on the

cord itself. Operating the unit with a damaged power supply cord may cause a fire or electric shock.

※ When moving the unit, be sure to remove its power supply cord from the wall outlet.

Moving the unit with the power cord connected to the outlet may cause damage to the power cord, resulting in fire or electric shock. When removing the power cord, be sure to hold its plug to pull.

※ Do not block the ventilation slots in the unit's cover.

Doing so may cause heat to build up inside the unit and result in fire.

※ Avoid installing the unit in humid or dusty locations,in locations exposed to the direct sunlight,

near the heaters,or in locations generating sooty smoke or steam as doing otherwise may result in fire or electric shock.

When the Unit is in Use

※ Do not place heavy objects on the unit as this may cause it to fall or break which may result in personal injury and/or property damage.In addition,the object itself may fall off and cause injury and/or damage.

※ Make sure that the volume control is set to minimum position before power is switched on. Loud noise produced at high volume when power is switched on can impair hearing.

※ Do not operate the unit for an extended period of time with the sound distorting.
This is an indication of a malfunction, which in turn can cause heat to generate and result in a fire.

※ Contact your dealer as to the cleaning. If dust is allowed to accumulate in the unit over a long period of time, a fire or damage to the unit may result.

※ If dust accumulates on the power supply plug or in the wall AC outlet, a fire may result. Clean it periodically. In addition, insert the plug in the wall outlet securely.

※ Switch off the power, and unplug the power supply plug from the AC outlet for safety purposes when cleaning or leaving the unit unused for 10 days or more.
Doing otherwise may cause a fire or electric shock.

DESCRIPTION & FEATURE

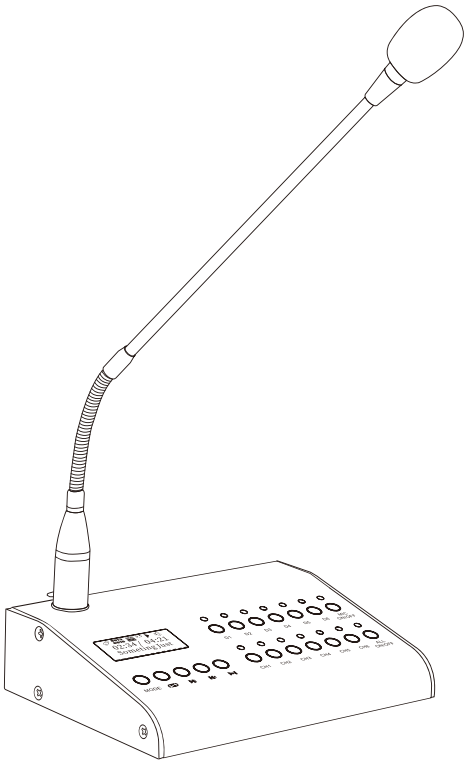

The 6x6 Remote Paging Microphone works together with 6CH Matrix Amplifier to make multiple-zone voice announcement up to 36 zones by using 6 units of matrix amplifier.
This microphone has equipped audio source U disk player,BT connectivity and AUX input,which allow users to play background music directly to the multiple-zone speakers.
This remote microphone can be placed anywhere where needed far away from the matrix amplifier up to 1000 meters with connection by CAT6 cable.

※ Built-in Mp3 module with USB player,Bluetooth.
※ LCD screen with display size (128*64) to show all details of playing.
※ This remote microphone can be placed anywhere far away from its counterpart Matrix Amplifier up to 1000 meters by using CAT6 cable.

※ Can make voice announcement to one selected zone or selected zones up to 36 zones.

※ Can play audio source U disk,BT to one selected zone or selected zones up to 36 zones.

※ Four microphones can be used in one system,each microphone has its own ID number set on rear panel.

FRONT PANEL

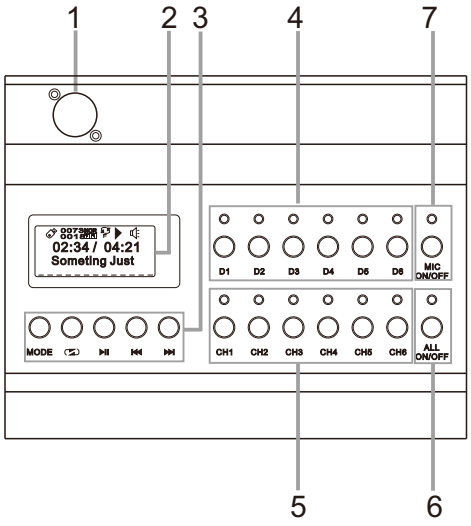

1. Microphone Pole Socket: Insert the shipped microphone pole here.

2. LCD Screen: Show all details of playing audio source.

3. Media Source Controllers:
Mode: To select the mode among USB,BT.

Repeat
Press this button to play a single song or all the songs repetitively,or to play the songs at random.

Play/Pause
Press this button to stop playing.
Press this button again to return to the song.

Prev
Press this button to return to the previous song.
Keep pressing this button for a few seconds to decrease the volume output of media.

Next
Press this button to move to the next song.
Keep pressing this button for a few seconds to increase the volume output of media.

4. Amplifier Selectors:
Press from D1 to D6 to select the amplifier with ID number from 1 to 6 respectively.

5. Zone Selectors:
Press to select zone 1 to zone 6.

For example: if you want to make voice announcement or play audio source to Zone 1 and Zone 2 of D1 amplifier, firstly press the D1 button,then press the CH1 and CH2 buttons.

6. All On/Off: Press this button to switch on or off all the zones on all the amplifiers.

7.MIC On/Off: Press this button to switch on or off the microphone.

REAR PANEL

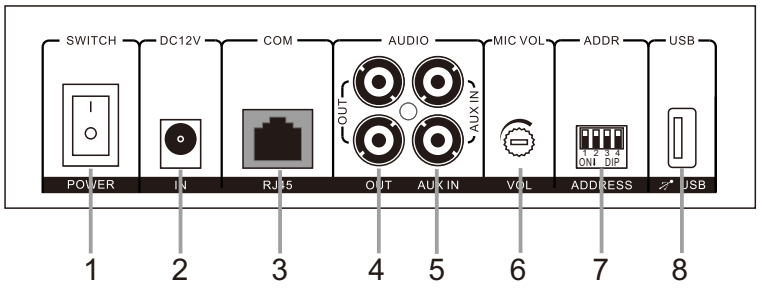

1. AC Power Switch: Power on or off this microphone.

2. Power Supply Socket: Insert the supplied AC power adapter (DC12V).

3. Rj45 Port: Use CAT5 or CAT6 cable to connect with matrix amplifier.

4. Audio Output: Supply audio signal to another device.

5. Audio Input: Connect external audio source device.

6. **Volume Control:** Use a flathead screwdriver to adjust volume of this unit.

7. DIP Switch for setting ID number of microphone:
Each one need different ID number when two or more microphone are used in one system (Move the DIP switch down to set the ID number of the microphone).

8. USB Port: Allows to play audio source of U disk.

SPECIFICATION

Model	
Audio Source	USB,BT,Aux
Paging Option	Individual-zone,group-zone,all-zone
Zones Controlled	1-36 Zone
Frequency	50Hz~20Khz
THD	<0.01% at 1Khz
S/N	>70db
CAT6 Distance	Up to 1km
Power Supply	DC24V 2A with AC adapter
Power Consumption	5-10W
Dimension (WxDxH)	205x151x51mm
Net Weight	1.20kg

CONNECTION ILLUSTRATION

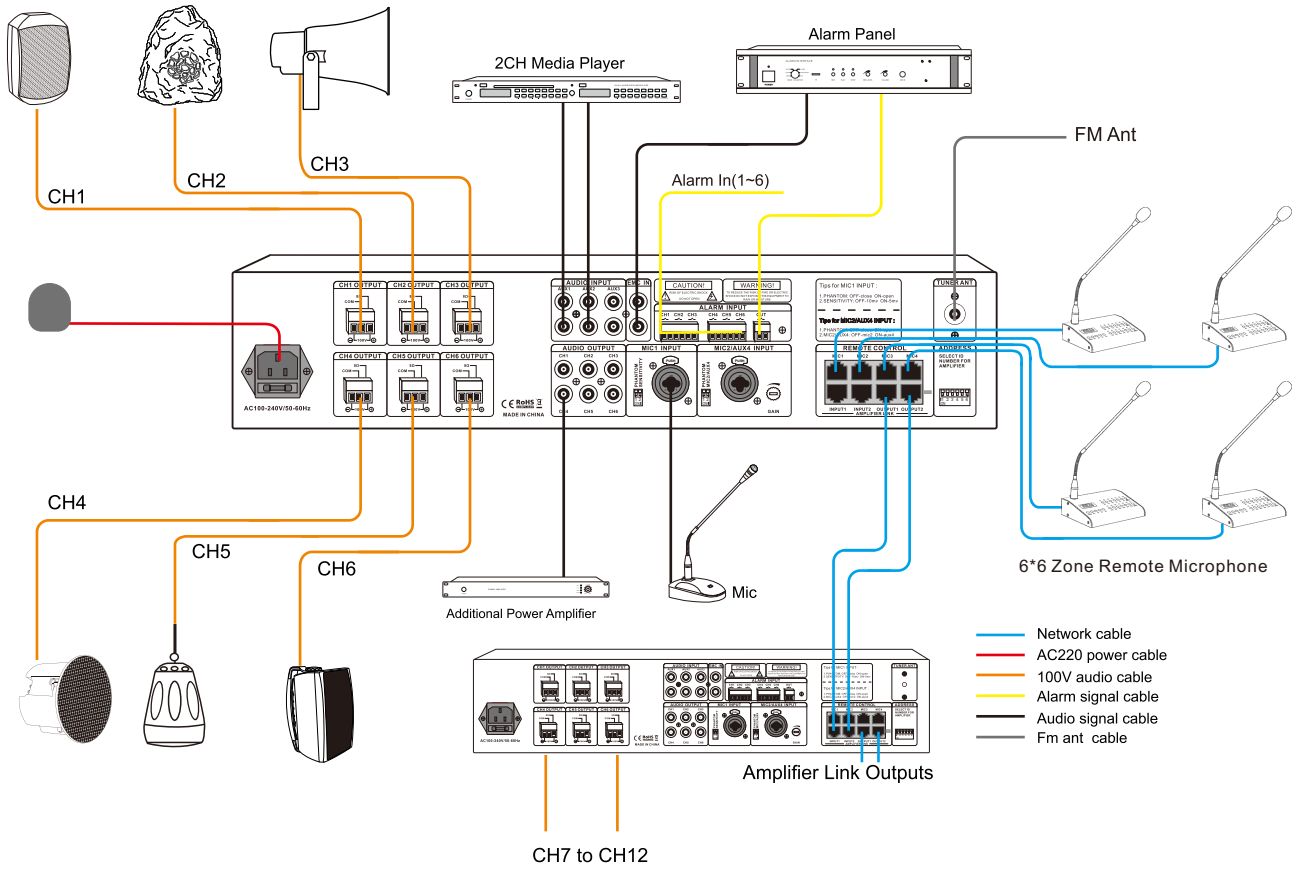

BT CONNECTION

*Note: The BT name of this unit is "**BGM SYSTEM**"

In order to enjoy music from a BT device on this amplifier,the Bluetooth device must first be paired with this unit.
Once the BT device has been paired, it does not need to be paired again.

1. Press the MODE button on the front panel of the amplifier to switch the input source to "BT".

2. Activate the BT setting on your mobile device.

3. Select this unit "**BGM SYSTEM**" when its name appears in the list of devices displayed on the screen of your mobile device.
Perform the connection with your mobile device close to the unit (about 1 m).
At the end of the pairing,the name "BGM SYSTEM" appears on the paired list of your mobile device.

4. Play music using any app on your moblie device.
* The next time the input source is switched to Bluetooth, this amplifier automatically connects to the last BT device that was connected.



CAUTION: Do not open the equipment cover arbitrarily, so as not to electric shock. Please contact the professionals to maintian if necessary.

The products are constantly improving,subject to change without prior notice.