PROFESSIONAL MIXERS

OWNER'S MANUAL

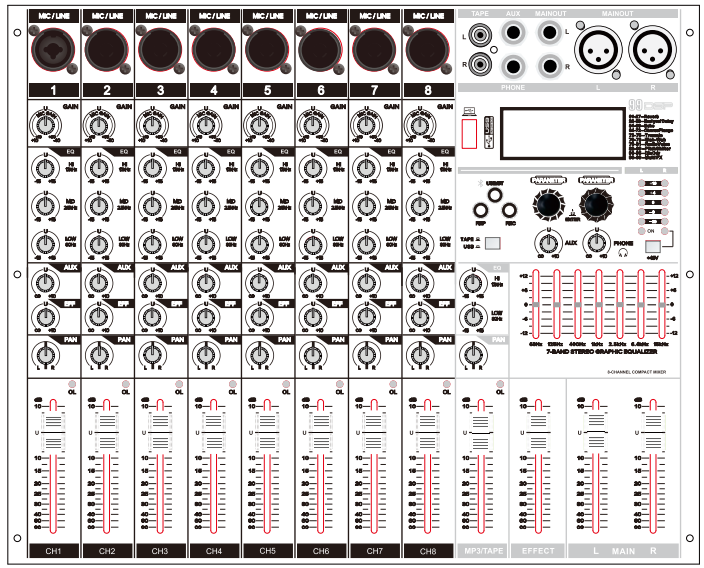

ENGLISH

OPERATING MANUEL

BLOCK DIAGRAM

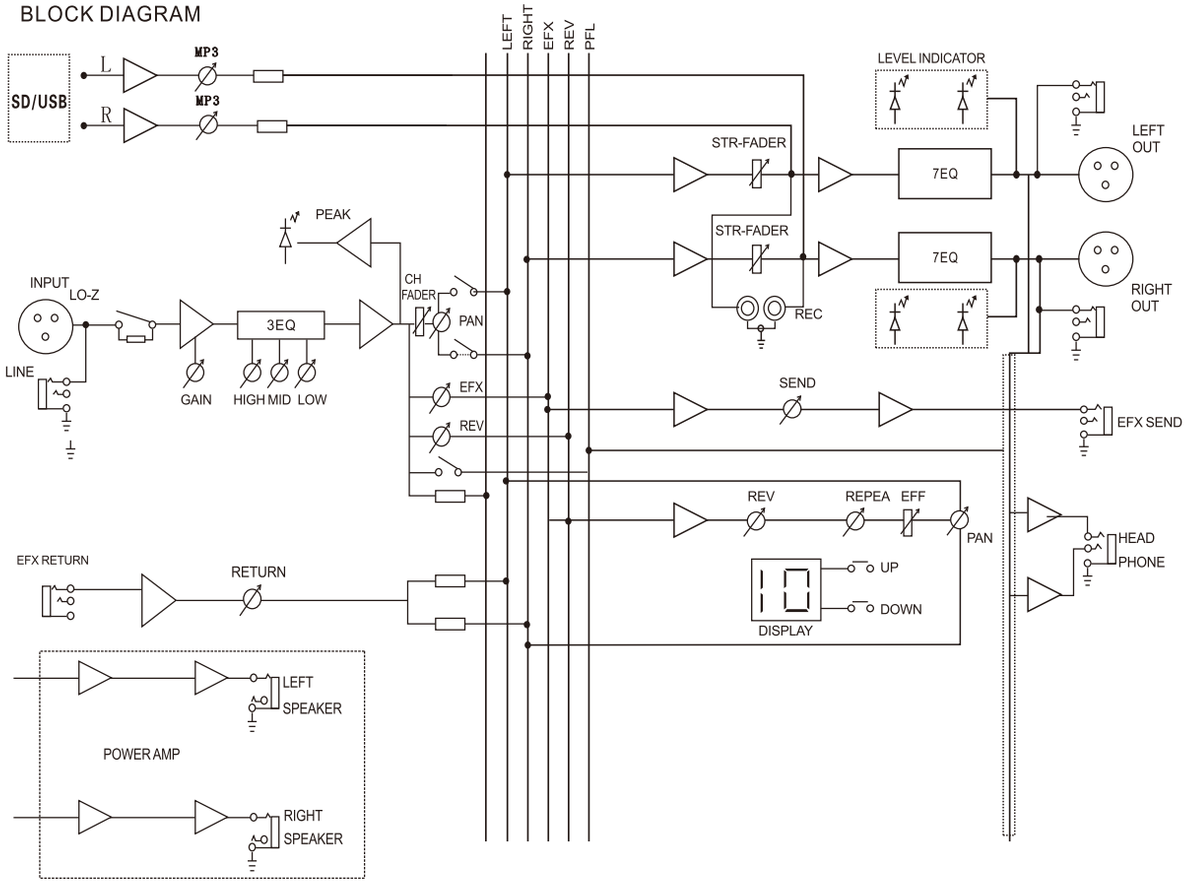

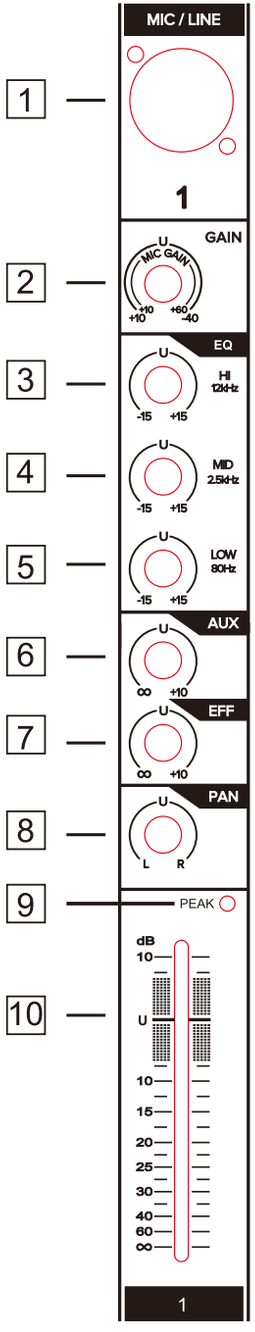

Mixer input channel function

1. MIC input interface
Balanced XLR input connection provides only high quality voice
Also available via a button like 48V phantom power supply using condenser microphone
Be sure to turn off the volume fader before activating the phantom power

2. Channel gain control knob
To control the microphone line input level
Achievable channel gain of +10 to 60dB

3. Channel high frequency adjustment knob
Control the + -15dB increase or decrease of the high frequency band of the channel equalizer at 12KHZ

4. Medium frequency adjustment knob
Control the +-15DB increase or decrease of the frequency band in the channel equalizer at 1.2KHZ

5. Channel bass adjustment knob
Control the + -15dB increase or decrease of low frequency band of channel equalizer at 80HZ

6. AUX send knob
Controls the level of signals sent to the auxiliary output bus

7. Effect send knob
Controls the signal level sent to the built-in effector

8. PAN audio and video balance knob
Controls left and right channel audio - visual balance in stereo

9. Peak indicator
If the indicator is on frequently means the input signal of the channel is overloaded
The channel input gain must be reduced to avoid sound distortion

10. Channel volume attenuation
Adjust the volume of the bus that enters the mixer

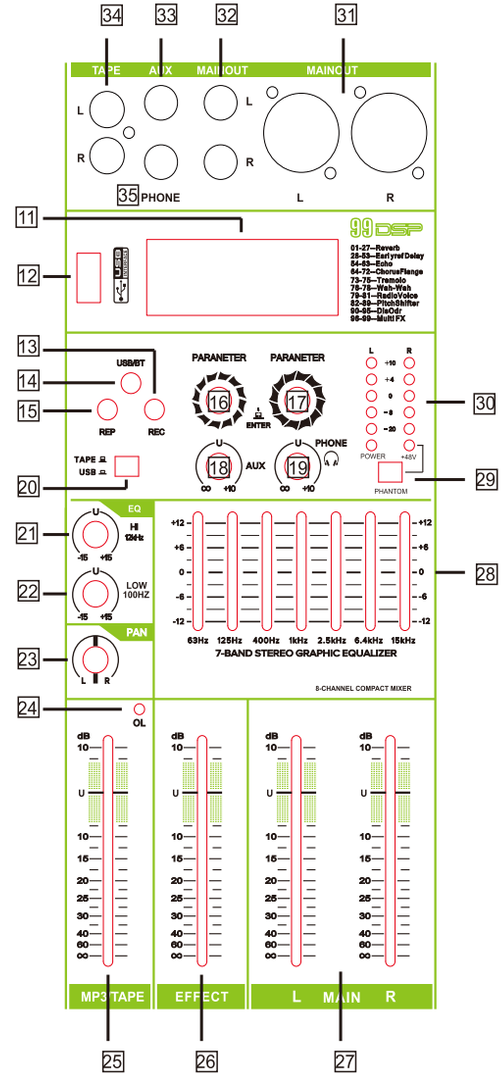

31. Main channel balanced output interface
32. Main channel 6.3 output interface
33. AUX auxiliary output interface
34. TAPT stereo lotus input interface
35. Monitor the earphone output interface

Main output panel function

11. The effect. MP3 LCD
12. USB interface, which supports sound card function
13. REC button: When a USB flash drive is inserted
    Long press this button to automatically enter the recording
    Long press this button to exit after recording
    Press this button to automatically play the recording file.
14. Player operation buttons.
    USB/BT button: Long press to switch between MP3 and Bluetooth playback
15. Player operation buttons.
    REP button: Press to switch the track playing mode in MP3 playing state
16. Player control knob
    (Clockwise) Next
    (Counterclockwise) the last tune
    Press (play, pause) function
17. Effect mode selection knob
    Turn the mode selection knob to select an effect number
    The blinking number on the monitor shows the preset program that has just been selected
    To confirm the selected preset program, press the knob to stop blinking.
18. Auxiliary output level adjustment
    Controls the auxiliary AUX volume to the total volume of the auxiliary output interface
19. Headphones monitor volume knob
    The volume of monitoring earphone can be adjusted through this knob
20. Switch button between TAPE input and MP3 player Press this button when selecting MP3 sound Press this button when selecting external audio signal input from TAPE interface
21. Adjust the treble of the player
    Control the + -15dB increase or decrease of the high frequency band of the channel equalizer at 12KHZ
22. Bass adjustment of player
    Control the + -15dB increase or decrease of the low frequency band of the channel equalizer at 100HZ
23. PAN audio and video balance knob
    Controls left and right channel audio - visual balance in stereo
24. Peak indicator light
    If the indicator is on frequently mesns the input signal of the channel is overloaded
    The channel input gain must be reduced to avoid sound distortion
25. USB channel volume fader
    Adjust the volume of the USB media player
26. Effector volume fader
    Adjust the main volume mixed by effector
27. MAIN MAIN output volume fader
    Adjust the fader to make the main output level reach the ideal state
28. 7 band equalization regulator
    Provides + -12dB gain in 7 bands
    Adjusting properly adjusting parameter equalization can meet different needs of sound amplification
29. 48V Phantom power switch
    Press this switch to supply 48V power to the channel balance interface properly
30. MAIN output volume level indicator
    LED level indicator can accurately indicate Output signal size of the mixer when the red light is on, properly control the volume of the mixer to avoid damaging the device

UNBALANCED 1/4"PLUG

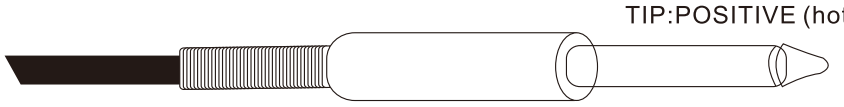

FAMALE 3 PIN CONNECTOR

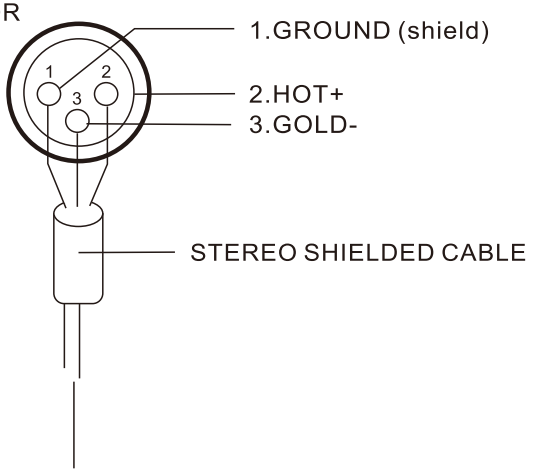

CN IMPORTANT SAFETY INSTRUCTIONS



WARNING
This symbol indicates that the device is in danger of electric shock. Use only high quality speaker cable with 1/4"TS plug. All installation or maintenance work should be carried out by professional personnel.

This symbol indicates the presence of uninsulated hazardous voltage in the product and the danger of electric shock.

This symbol reminds you that the product has important operation and maintenance instructions. Please read this instruction manual.

PAY ATTENTION TO
Do not open the chassis (or rear panel) to avoid electric shock. There are no parts available for user maintenance. Maintenance is operated by professional personnel.

PAY ATTENTION TO
To avoid fire or electric shock, do not place the device in rain or humidity. There is no liquid splashing into the equipment. Any liquid containers should not be placed on top of the equipment such as vases.

PAY ATTENTION TO
These instructions are for professionals only. To avoid electric shock, do not perform services not mentioned in this operation manual. All repairs should be carried out by professional personnel only.

1. Please read these instructions
2. Keep these instructions properly
3. Please pay attention to all the warnings
4. Please follow all the instructions
5. Do not use the product near water
6. Please wipe the product with a dry cloth when cleaning
7. Do not block the vent, please pay attention to the manufacturer's instructions when installing the product.
8. Do not install the product near heat sources, such as radiators, stoves or other devices that generate heat (including power amplifiers).
9. Do not remove the safety device of the polar plug or grounding plug. The polar plug consists of two plug contacts, one of which is wider than the other. The grounding plug consists of two plug contacts and a ground head. Wide plug point and grounded plug point to ensure your safety. If the plug supplied with the goods does not fit your socket, please ask an electrician to replace it with a suitable socket.
10. Lay the power cable correctly to prevent it from being stepped on or pricked by sharp angles, especially at the power plug and connected devices.
11. Use only additional equipment and spare parts specified by the manufacturer.
12. Use only carts, shelves, tripods, stands, and tables as specified by the manufacturer or devices sold with the goods. If you use a cart to move the equipment, please place it safely to avoid injury caused by falling down.
13. Pull out the power plug when the device is not used for a long time or in a storm.



14. All maintenance work must be carried out by qualified maintenance personnel. When the equipment is damaged (for example, the power cord or power plug is damaged, water or liquid flows into the equipment, items fall on the equipment, the equipment is resprayed or invaded by moisture, the equipment cannot work properly, the equipment falls to the ground), maintenance must be carried out.
15. The equipment must have grounding protection.
16. If power plugs or power connectors have power disconnection functions, they must be in a place where they can be reached at any time.

