WALL PANEL INSTALL INTRODUCTION

Introduction

1.Input Volume Setting

2.Output Volume Setting

3.Scene Setting

4.Device Infromation

5.Language Setting

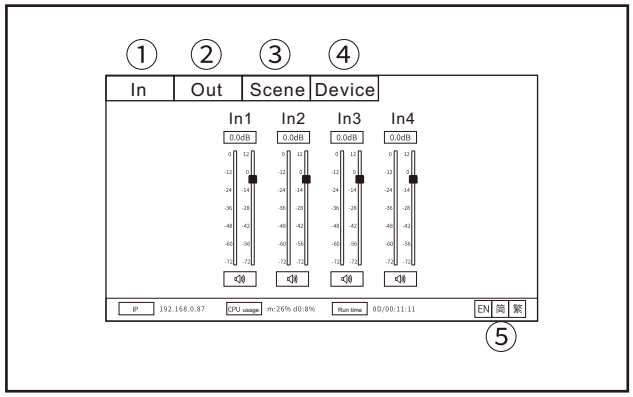

Setting

Open the software on the computer,
then go to the"Device setting" interface,
go to the "Serial"seting,modify the "ProtocolType"
to"Wall panel"

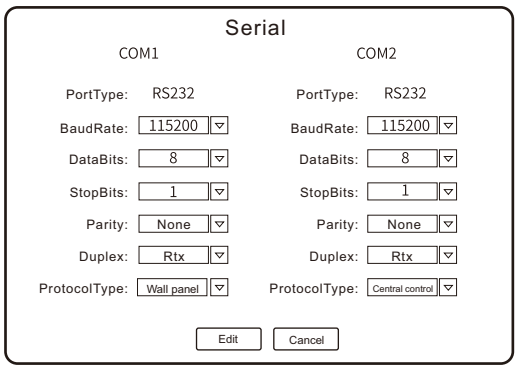

Installation

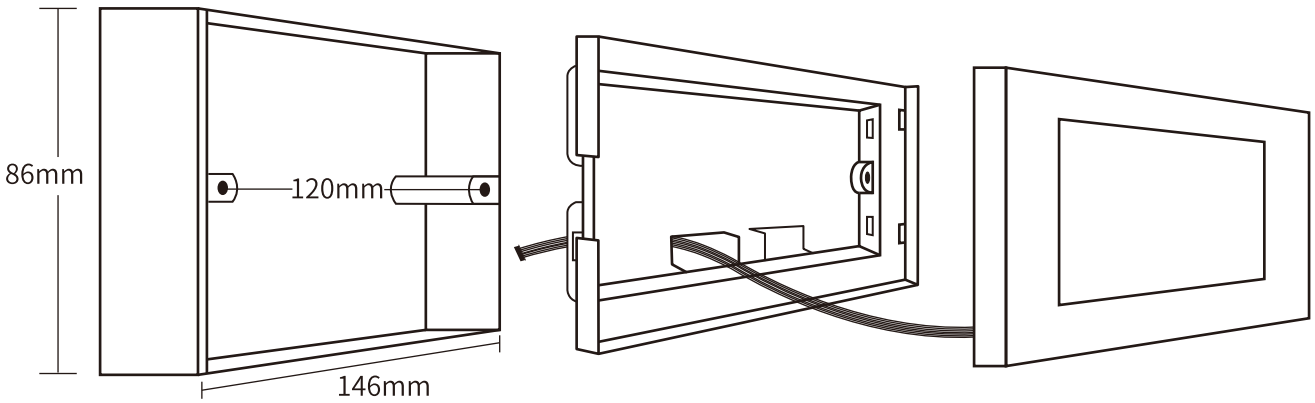

Seat **Rear Panel** **Front Panel**

1.Fix the base with screws first
2.then fix the rear panel on the base with screws
3.finally install the front panel on the rear panel

Connection

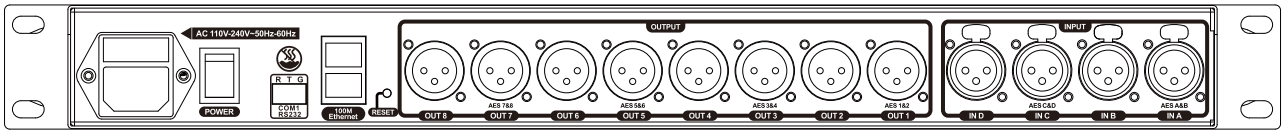

Audio Processor

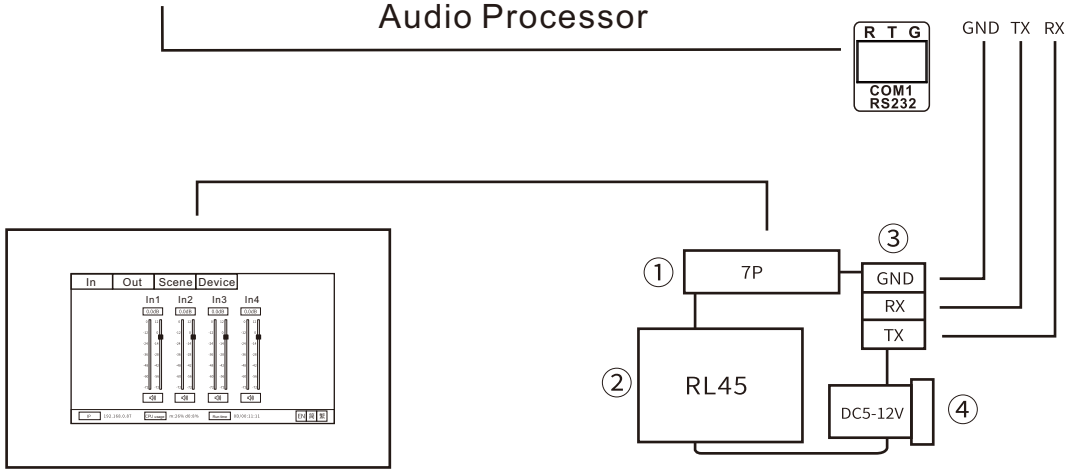

Wall Panel

Transfer device

1.7P interface 2.RJ45 3.RS232 4.DC5-12V Power Interface

Size

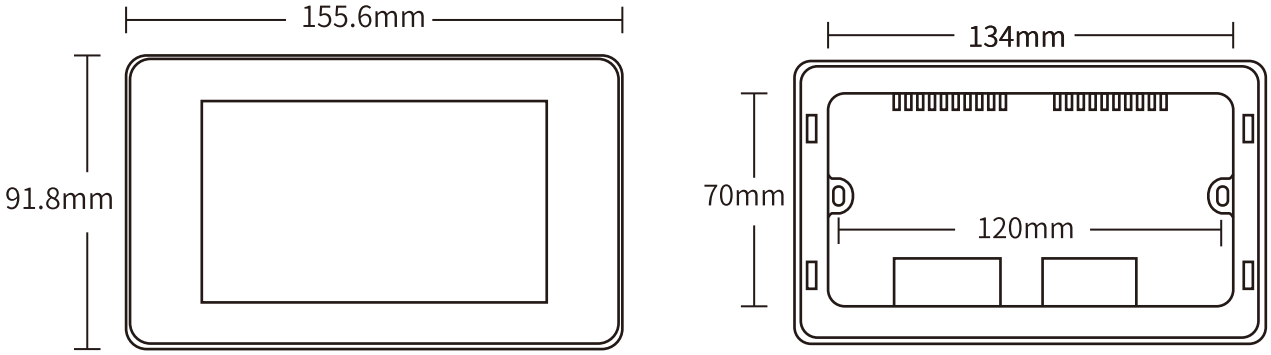

Accessories

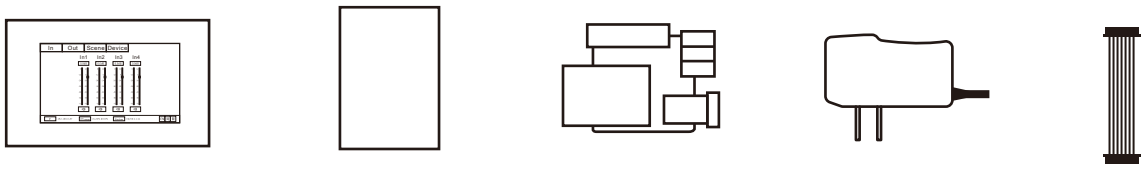

1.Wall Panel*1 2.User Manual*1 3.Transfer device*2 (For cascading wall panel) 4.Power plug*1 5.7P Cable*1