HD Color Video Camera

User Manual

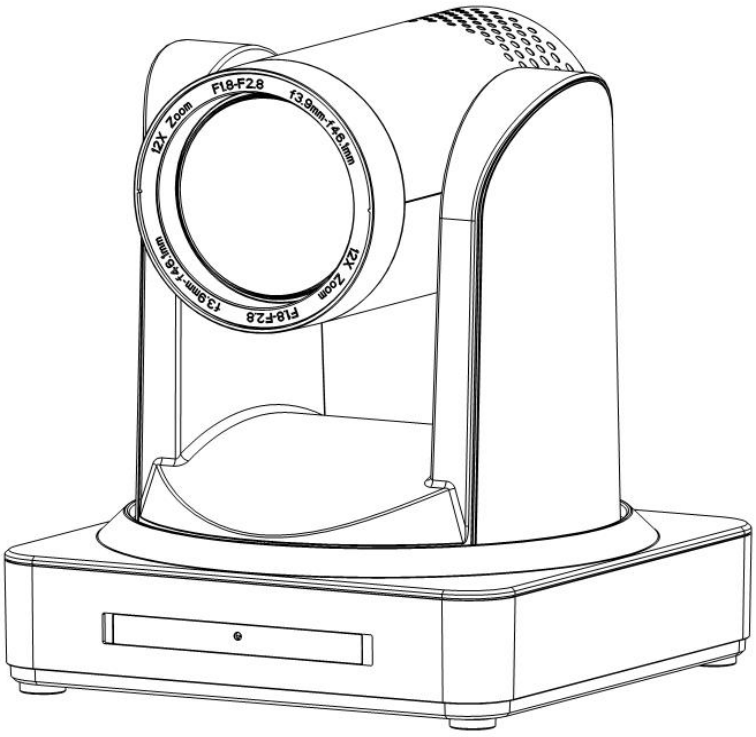

Attentions

Electric Safety
Installation and operation must accord with electric safety standard
Caution to transport
Avoid stress, vibration and soakage in transportation, storage and installation.
Polarity of power supply
The power supply of the product is ±12V, the max electrical current is 2A .Polarity of the power supply drawing.



Careful of installation
Never move the camera by seizing the camera head. Don't rotate camera head by hand; otherwise, mechanical trouble will occur.
This series item must be put on the smooth desk or platform, and it can not be installed slant ways;
If the camera is installed on TV or computer, the base can be fixed by four double-sided adhesive trays.
Don't apply in corrosive liquid, as or solid environment to avoid the cover which is made up of organic material.
To make sure no obstacle in rotation range.
Never power on before installation is completed.

Don't disassemble discretionarily.
We are not responsible for any unauthorized modification or dismantling.

Attention
Electromagnetic filed under certain rate may affect camera image!

Content

1. Fast Installation 4
1.1 Camera Interface Explanation 4
1.2 Power on initial configuration 5
1.3 Video Output 5
2. Product overview 9
2.1 Product Introduction 9
2.1.1 Product Model 9
2.1.2 Dimension 10
2.1.3 Accessory 10
2.2 Main Features 11
2.2.1 Camera Performance 11
2.2.2 Network performance 11
2.3 Technical Specification 12
2.4 Interface Instruction 13
2.4.1 External Interface 13
2.4.2 Bottom Dial Switch 15
2.4.3 RS-232 Interface 16
3. Application Instruction 17
3.1 Video Output 17
3.1.1 Power-On Initial Configuration 17
3.1.2 Video Output 17
3.2 Remote Controller 18
3.2.1 Keys Instruction 18
3.2.2 Applications 19
3.3 MENU SETTING 20
3.3.1 Main Menu 20
3.3.2 System Setting 21
3.3.3 Camera Setting 21
3.3.4 P/T/Z 24
3.3.5 Video Format 24
3.3.6 Version 25
3.3.7 Restore Default 25
4. Network Connection 25
4.1 Connecting Mode 25
4.2 IE Log In 28
4.2.1 Web client 28
2)Download/Install Plug in 28
4.2.2 Preview 28
4.2.3 Playback 29
4.2.4 Configuration 29
4.2.5 Video configuration 29
4.2.6 Network configuration 31
4.2.7 System configuration 32
4.2.8 Logout 33

4.2.9 Wireless network 33
5. Serial Communication Control 34
5.1 VISCA protocol list 34
5.1.1 Camera return command 34
5.1.2 Camera control command 34
5.1.3,Inquiry command 37
5.2,Pelco-D protocol command list 38
5.3 Pelco-P protocol command list 39
6. Camera Maintenance and Troubleshooting 40
6.1 Camera Maintenance 40
6.2 Troubleshooting 40

1. Fast Installation

1.1 Camera Interface Explanation

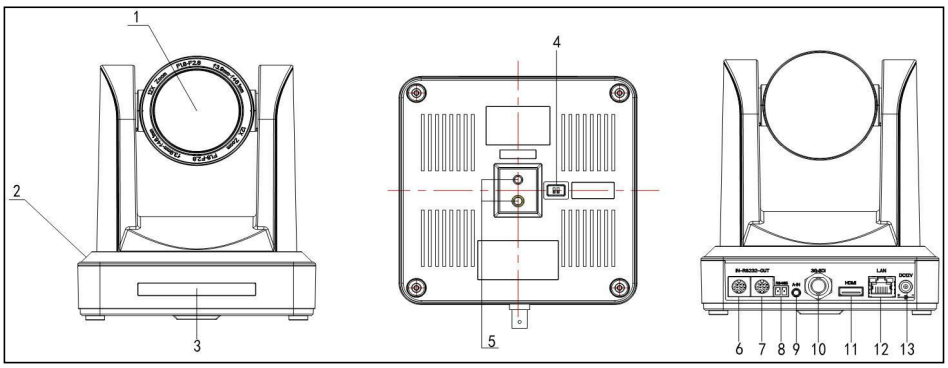

Figure 1.1 Interface of ST (standard) Series

1. Camera Lens
2. Camera Base
3. Remote Controller Receiver Light
4. Bottom Dial Switch
5. Tripod Screw Hole
6. RS232 Control Interface (input)
7. RS232 Control Interface (output)
8. RS485 Input (left +,right-)
9. Audio Input Interface
10. 3G-SDI interface
11. HDMI Interface
12. 10/100M Network Interface
13. DC12V Input Power Supply Socket

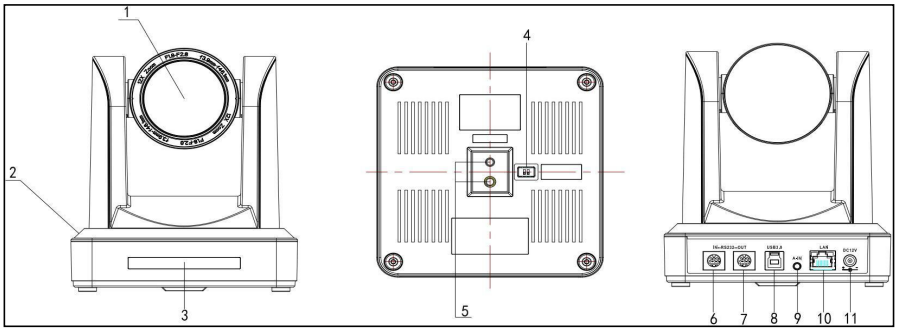

Figure 1.2 Interface of U3 (USB3.0) Series

1. Camera Lens
2. Camera Base
3. Remote Controller Receiver Light
4. Bottom Dial Switch
5. Tripod Screw Hole
6. RS232 Control Interface (input)
7. RS232 Control Interface (output)
8. USB3.0 interface
9. Audio Input Interface
10. 10/100M Network Interface
11. DC12V Input Power Supply Socket

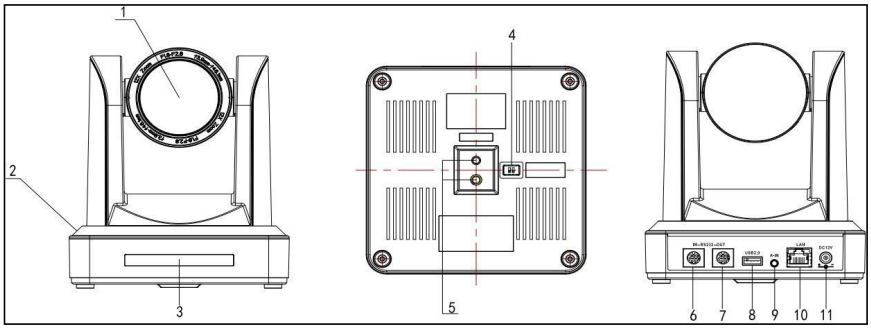

Figure 1.3 Interface of U2 (USB2.0) Series

1. Camera Lens
2. Camera Base

3. Remote Controller Receiver Light
4. Bottom Dial Switch
5. Tripod Screw Hole
6. RS232 Control Interface (input)
7. RS232 Control Interface (output)
8. USB2.0 interface
9. Audio Input Interface
10. 10/100M Network Interface
11. DC12V Input Power Supply Socket

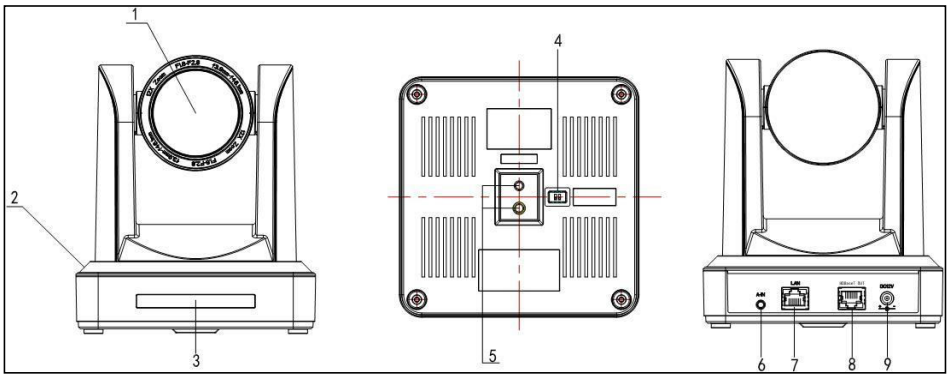

Figure 1.4 Interface of HD BaseT Series

1. Camera Lens
2. Camera Base
5. Tripod Screw Hole
6. Audio Input Interface
7. 10/100M Network Interface
3. Remote Controller Receiver light
4. Bottom Dial Switch
8. HD-BaseT interface
9. DC12V Input Power Supply Socket

Audio input interface: Users can connect external microphone or pick-up (3.5mm audio cable). Audio and video output at the same time through LAN port.

Note: ST model is standard interface, U3 model is USB3.0 interface, U2 model has USB2.0 interface, HD model has HD BaseT interface. Users should read the manual according to the special model.

1.2 Power on initial configuration

1) Power on: Connect DC12V power supply adapter with power supply socket.

2)Initial configuration: Power on with power indicator light on and remote control receiver light blinking, camera head moves from bottom left to the bottom, and then goes to the HOME position (intermediate position of both horizontal and vertical),while the camera module stretches. When remote control receiver light stops blinking, the self-checking is finished

Note: If you set preset 0, when Power on self-test is completed, the camera automatically moves to the preset 0 position.

1.3 Video Output

This series has a variety of video output; ST models have video output from LAN, HDMI and 3G-SDI, U3 models from LAN and USB3.0 which is compatible with USB2.0, and U2 models from LAN and USB2.0. HD models from LAN and HD-BaseT.

1) Video Output from LAN

a. Network Cable Connection Port: ST Model--No.12 in Figure1.1; U3 Model--No. 8 in Figure1.2; U2 Model--No.8 in Figure 1.3.

b. Webpage Login: Open your browser and enter 192.168.5.163 in the address bar (factory default); press Enter to enter into the login page; click on the “player is not installed, please download and install!" and follow the installation steps for installation. Then enter the user name *admin* and password *admin* (factory default); press Enter to enter into the preview page, users can carry out PTZ control, video recording, playback, configuration and other operations.

2) HDMI Video Output

a. HDMI Video Cable Connection: ST models refer to No.11 in Figure1.1

b. Connect the camera and the monitor via HDMII video cable; video output is available after camera self-test.

3) 3G-SDI Video Output

a. 3G-SDI video cable connection: ST models refer to No.10 in Figure1.1

b. Connect the camera and the monitor via 3G-SDI video cable; video output is available after camera self-test.

4) USB3.0 video output

a. USB3.0 video cable connection: U3 models refer to NO.7 in figure1.2.

b. Connect the camera and the monitor via USB3.0 video cable, open video display software, select image device, and then video output will be available.

5) USB3.0 compatible with USB2.0 output

a. USB3.0 video cable connection: U3 models refer to NO.7 in Figure1. 2.

b. Connect the camera and the monitor via USB3.0 video cable, open video display software, select image device, and then video output will be available.

6) USB2.0 video output

a. USB2.0 video cable connection: U2 models refer to NO.7 in Figure1. 3.

b. Connect the camera and the monitor via USB2.0 video cable, open video display software, select image device, and then video output will be available.

7) HDBaseT video output

a. IP cable connect: HD model pls refer to figure 1.0 No.8.

b. Connect the device, HD BaseT signal receiving device and the display together properly through the network cable and video cable. Image could be displayed after the device finish self inspection.

HD Baset signal receiving device : HD Baset adapter box, input HD Baset signal, output HDMI signal.

Note: USB2.0 output and USB3.0 output is the same interface.

1.4 Bracket mount

Note: Bracket can only be wall mounted or upside down mounted on template and concrete wall, but can not be installed on plasterboard.

1) Wall mount step

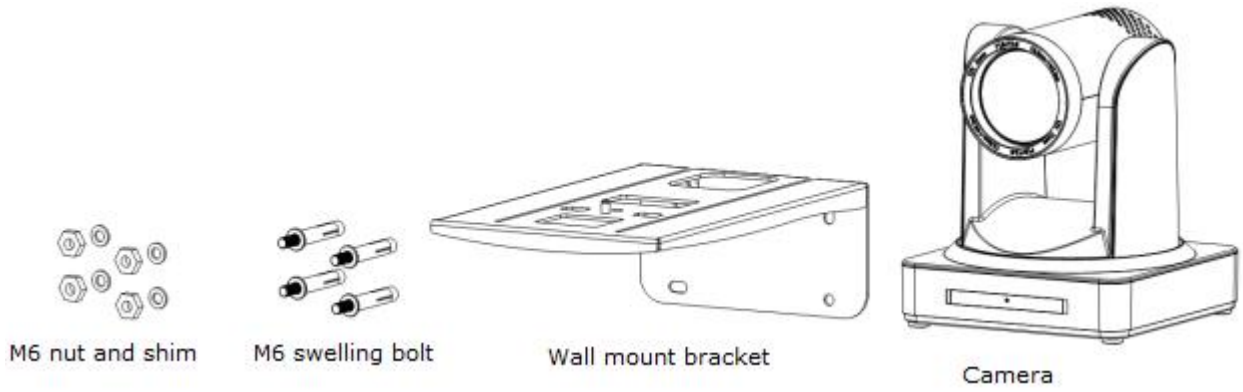

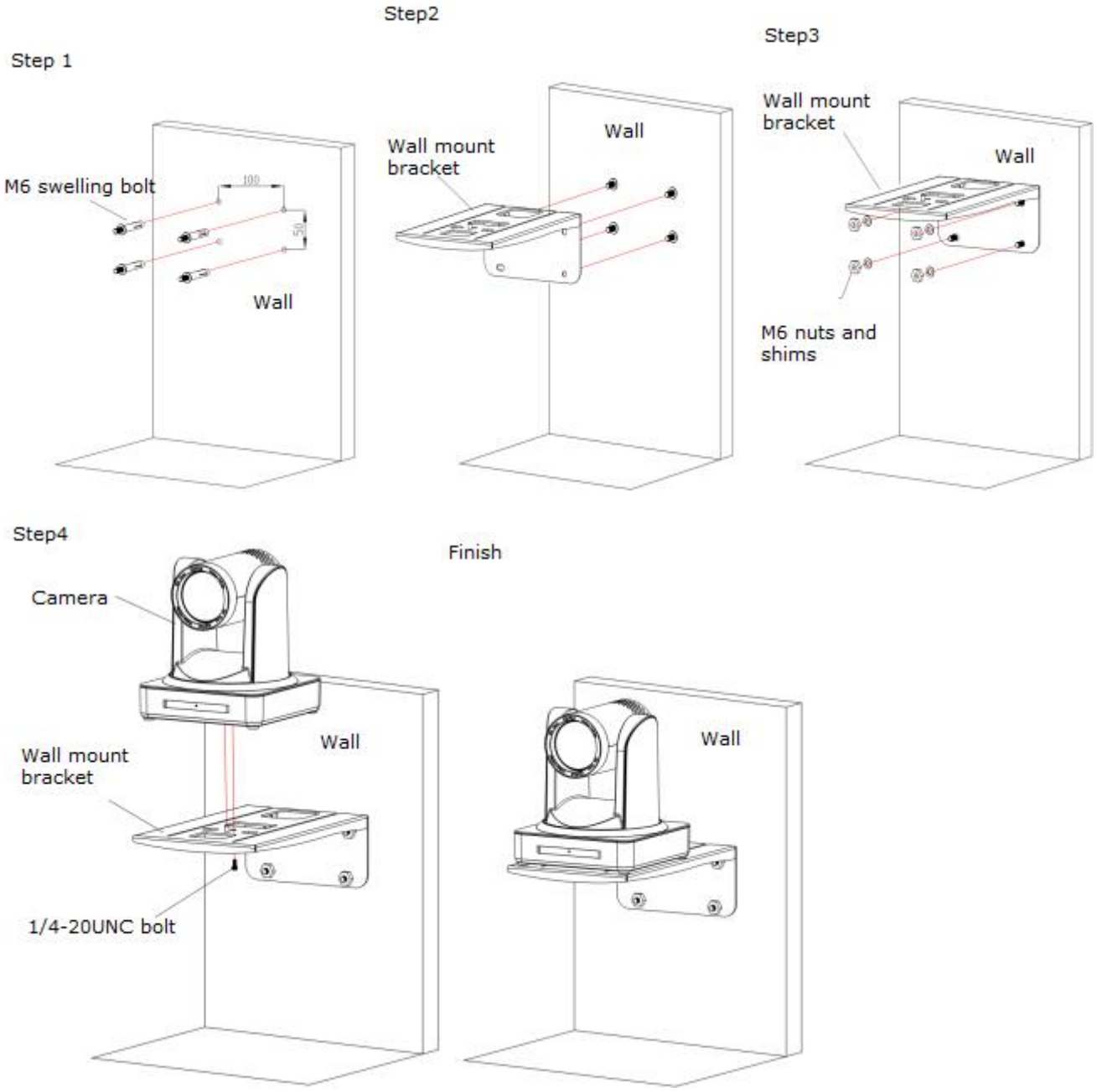

2. Upside down mount step

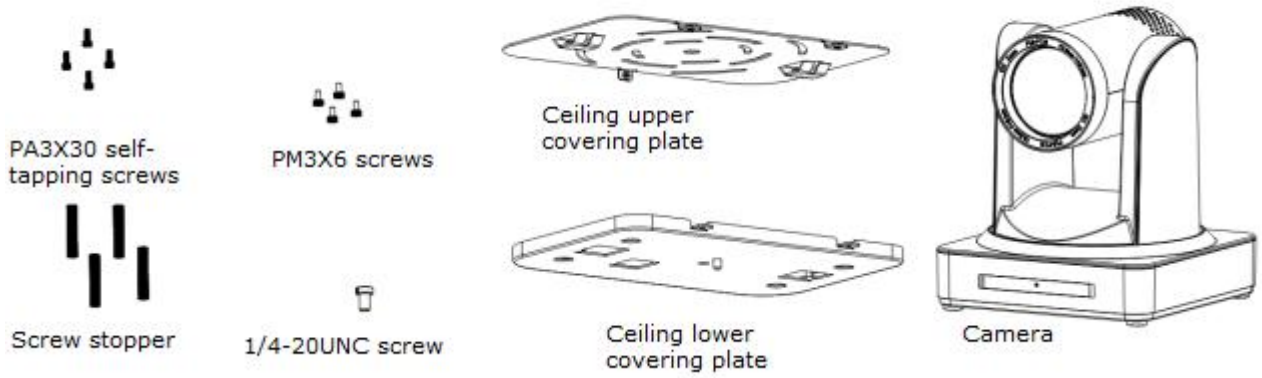

Step1

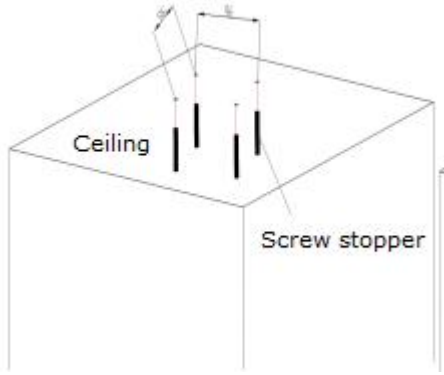

Step2

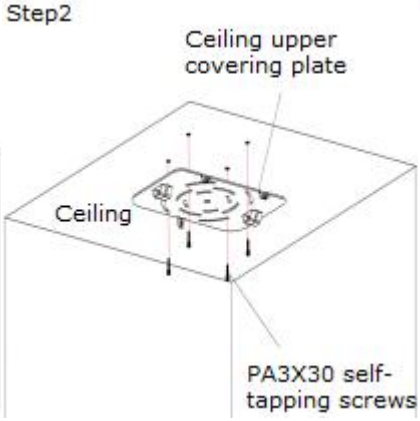

Step3

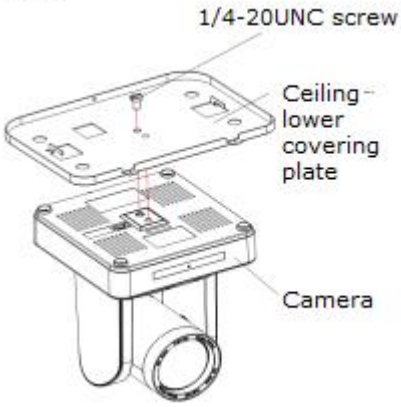

Step4

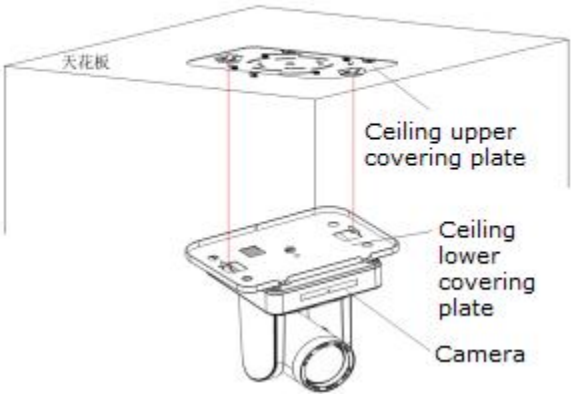

Step5

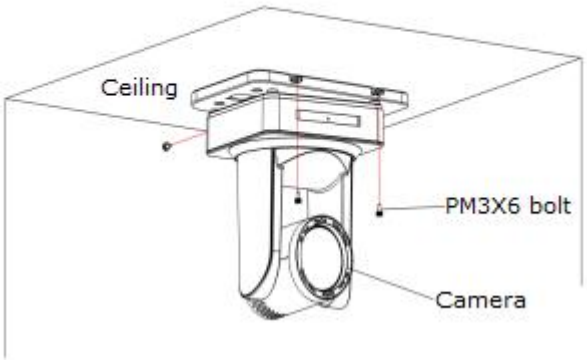

2. Product overview

2.1 Product Introduction

2.1.1 Product Model

There are four main series according to different video formats, lens optical zooms, output interfaces and remote control modes.

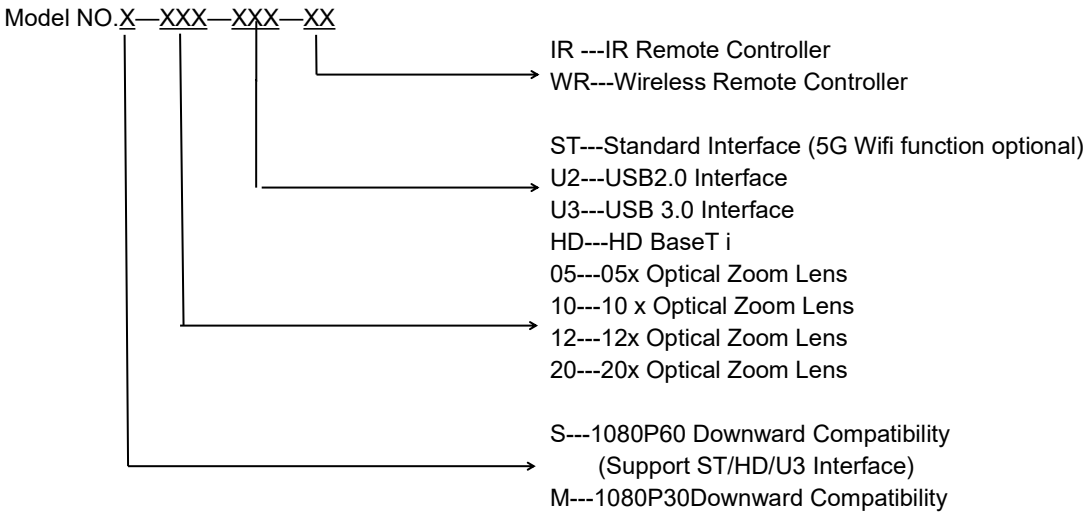

Please refer to corresponding features in this manual.

Note: 5Gwifi is optional for ST (standard) series only.

2.1.2 Dimension

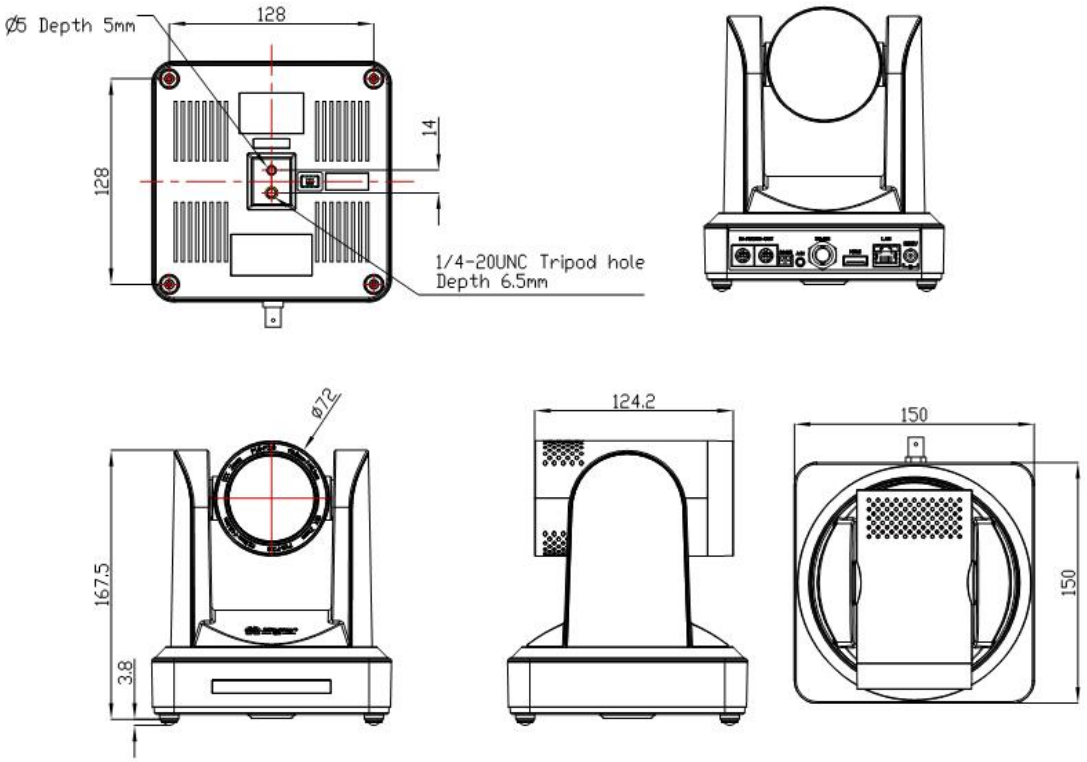

Figure 2.2 Camera dimension

2.1.3 Accessory

When you unpack, check that all the supplied accessories are included:

Model NO.	Configuration	ST Series	U3 Series	U2 Series	HD BaseT Series
Accessory	Standard	Power adapter 1piece	Power adapter 1 piece	Power adapter 1 piece	Power adapter 1 piece
		RS232 cable 1 piece	USB3.0 cable 1 piece	USB2.0 cable 1 piece	
		User manual 1	User manual 1	User manual 1	User manual 1
		Double-side glue shim 4pcs	Double-side glue shim 4pcs	Double-side glue shim 4pcs	Double-side glue shim 4pcs
		Warranty card 1 piece	Warranty card 1 piece	Warranty card 1 piece	Warranty card 1 piece
	Optional	IR Remote controller 1 piece	IR Remote controller or wireless controller 1 piece	IR Remote controller or wireless controller 1 piece	IR Remote controller or wireless controller 1 piece
		Wireless controller 1 piece	Wireless controller 1 piece	Wireless controller 1 piece	Wireless controller 1 piece
		Wall mounting bracket	Wall mounting bracket(optional)	Wall mounting bracket(optional)	Wall mounting bracket(optional)
		Upside-down mounting bracket(optional)	Upside-down mounting bracket(optional)	Upside-down mounting bracket(optional)	Upside-down mounting bracket(optional)
		Cascade cable			

USB2.0 Video cable: If need USB2.0 cable to provide power but not a power adapter, USB2.0 Video cable with two ports is needed, among which red port is for power supply and black port for transmitting USB video signals. If using a power adapter, the general USB2.0 video cable without power supply function is ok.

2.2 Main Features

2.2.1 Camera Performance

This series camera offers perfect functions, superior performance and rich interfaces. The features include advanced ISP processing algorithms to provide vivid images with a strong sense of depth, high resolution and fantastic color rendition. It supports H.265/H.264 encoding which makes motion video fluent and clear even with less than ideal bandwidth conditions.

1.**Superb High-definition Image:** It employs 1/2.8 inch high quality CMOS sensor. Resolution is up to 1920x1080 with frame rate up to 60 fps.
2.**Various Optical Zoom Lens:** It has 5X/10X/12X/20X optical zoom lens for options. The 5X zoom lens is with 80.9 ° wide view angle without distortion.
3. **Leading Auto Focus Technology:** Leading auto focus algorithm makes lens a fast, accurate and stable auto-focusing.
4. **Low Noise and High SNR:** Low Noise CMOS effectively ensure high SNR of camera video.
Advanced 2D/3D noise reduction technology is also used to further reduce the noise, while ensuring image sharpness.
5.**Quiet PTZ**: By adopting high accuracy step driving motor mechanism, it works extremely quiet and moves smoothly and very quickly to designated position.
6.**Multi-Format Video Outputs:** support HDMI,3G-SDI, USB, wired LAN and wireless LAN interfaces
The 3G-SDI is available for 100m transmission at 1080p60 format.
7.**Multiple Remote Controls:** There is IR remoter and 2.4G wireless remote for options. The 2.4G wireless remote controller will not be affected by angle, distance or IR interference. Support transparent transmission function.
8.**Low-power Sleep Function:** Support low-power sleep/wake up, the consumption is lower than 500mW under sleep mode
9.**Support Multiple Control Protocol:** Support VISCA, PELCO-D, PELCO-P protocols which can also be automatically recognized. Support VISCA control protocol through IP port.
10.**RS-232 Cascade Function:** ST series support RS-232 cascade function which is convenient for installing.
11.**255 Presets Positions:** Up to 255 presets (10 presets by remoter).
12.**Wide Application:** Tele-education, Lecture capture,Webcasting,Videoconferencing,Tele-training,Tele-medicine, Interrogation and Emergency command systems.

2.2.2 Network performance

1. **Audio Input Interface:** Support 16000,32000,44100,48000 sampling frequency and AAC, MP3, PCM audio coding.
2. **Multiple Audio/Video Compression:** Support H.264/H.265 video compression; AAC,MP3 and PCM audio compression; Support compression of resolution up to 1920x1080 with frame up to 60 fps and 2 channel 1920x1080p with 30 fps compression.
3. **Multiple network protocol:** Support ONVIF,RTSP,RTMP protocols and RTMP push mode, easy to link streaming media server (Wowza, FMS)
4. **5G WIFI function**: If the product contains 5G wifi module, you can set up a wireless wifi connection in a webpage, the specific configuration described in detail on the page of web configuration.

2.3 Technical Specification

Model	5X	10X	12X	20X
Camera Parameter				
Sensor	1/2.8 inch high quality HD CMOS sensor			
Effective Pixels	16: 9 2.07 megapixel			
Video Format	**ST video format** 1080P60/50/30/25/59.94/29.97;1080I60/50/59.94;720P60/50/30/25/59.94/29.97 **U3 interface video format** 1)U3:1920X1080P60/50/30/25;1280X720P60/50/30/25;960X540P30;640X360P30;640X480P30;352X288P30;960X540P30; 2)U3 compatible with U2: 960X540P30; 640X360P30; 1280X720P10/15; 720X576P50; 720X480P60; 640X480P30; 352X288P30. **U2 interface video format** 176x144/320x240/320x180/352x288/640x480/720x576/640x360/800X600/960X540/1024X576/1024X768/1600X896/1920X1080/1280X720；P30/25/20/15/10/5			
Optical Zoom	5X f＝3.6～18mm	10X f＝4.7～47mm	12X f＝3.9～46.1mm	20X f＝5.2～98mm
View Angle	16.43°（tele） 80.9°（wide）	6.43°（tele） 60.9°（wide）	6.3°（tele） 72.5°（wide）	3.2°（tele） 55.8°（wide）
AV	F1.6 – F3.0	F1.6 – F3.0	F1.8 – F2.4	F1.5 – F3.0
Digital Zoom	10X			
Minimum Illumination	0.5Lux (F1.8, AGC ON)			
DNR	2D & 3D DNR			
White Balance	Auto / Manual/ One Push/ 3000K/ 4000K/5000K/6500K			
Focus	Auto/Manual			
Aperture	Auto/Manual			
Electronic Shutter	Auto/Manual			
BLC	ON/OFF			
WDR	OFF/ Dynamic level adjustment			
Video adjustment	Brightness, Color, Saturation, Contrast, Sharpness, B/W mode, Gamma curve			
SNR	>55dB			

Input/Output Interface	
Video Interfaces	05/10/12/20-ST Model：HDMI, 3G-SDI,LAN 05/10/12/20-U2 Model：USB2.0（power supply available）, LAN 05/10/12/20-U3 Model：USB3.0（power supply available）,LAN 05/10/12/20-HD Model：HDBaseT（power supply available）,LAN
Image code stream	Double streams outputs simultaneously
Video Compression format	H.264, H.265
Control Signal Interface	RS-232 Ring through RS232 output, RS-485
Control Protocol	VISCA/Pelco-D/Pelco-P; Baud Rate: 115200/9600/4800/2400bps
Audio input Interface	Double track 3.5mm linear input;
Audio Compression Format	AAC/MP3/PMC Audio compression
HD IP Interface	100M IP port(100BASE-TX); 5G WiFi (optional), support IP Visca control protocol
Network Protocol	RTSP/RTMP,ONVIF
Power Interface	HEC3800 outlet (DC12V)

PTZ Parameter	
Pan Rotation	±170°
Tilt Rotation	-30°～+90°
Pan Control Speed	0.1 -180°/sec
Tilt Control Speed	0.1-80°/sec
Preset Speed	Pan: 60°/sec, Tilt: 30°/sec
Preset Number	255 presets (10 presets by remote controller)
Other Parameter	
Supply Adapter	AC110V-AC220V to DC12V/2A

Input Voltage	DC12V±10%
Input Current	1A(Max)
Consumption	12W (Max)
Store Temperature	-10℃ to +60℃
Store Humidity	20% - 95%
Working Temperature	-10℃ to +50℃
Working Humidity	20%--80%
Dimension	150mmX150mmX167.5mm
Weight	1.4KG
Working Environment	Indoor
Remote Operation (IP)	Remote Upgrade, Reboot and Reset
Accessory	Power Supply,RS232 Control Cable,USB3.0 Cable（U3 Model）,USB2.0 Cable（U2 Model）,Remoter,Manual, Warranty card
Optional Accessory	Bracket

2.4 Interface Instruction

2.4.1 External Interface

1) External interface of ST models: RS232 Input /Output, RS485 Input, Audio Input,3G-SDI Output, HDMI Output, LAN, DC12V Power Interface.

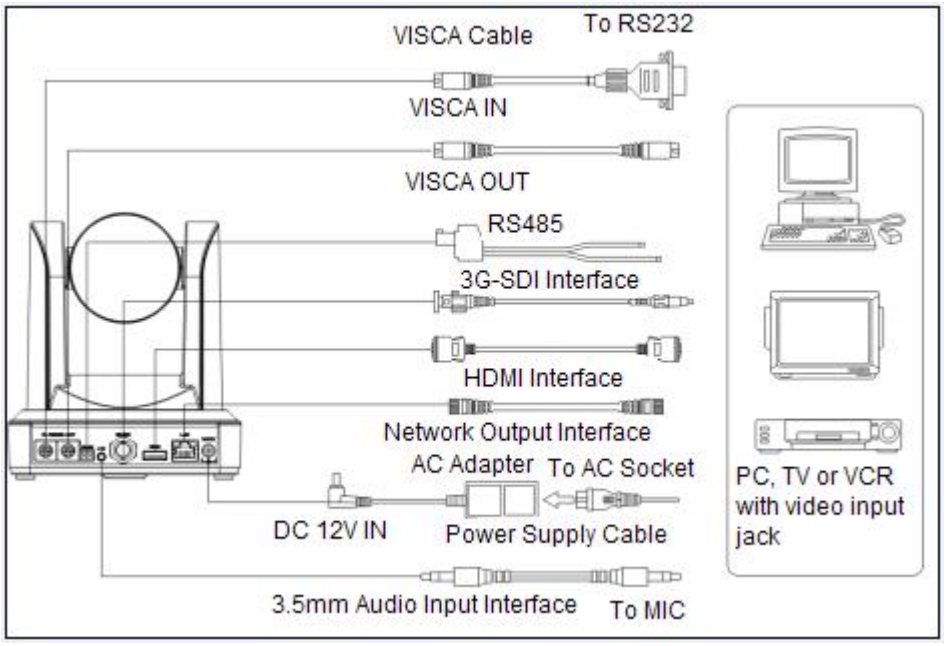

Figure 2.3 ST model external interface diagram

2) External interface of U3 model: Audio Input, USB 3.0 Output, LAN, DC12V Power Interface.

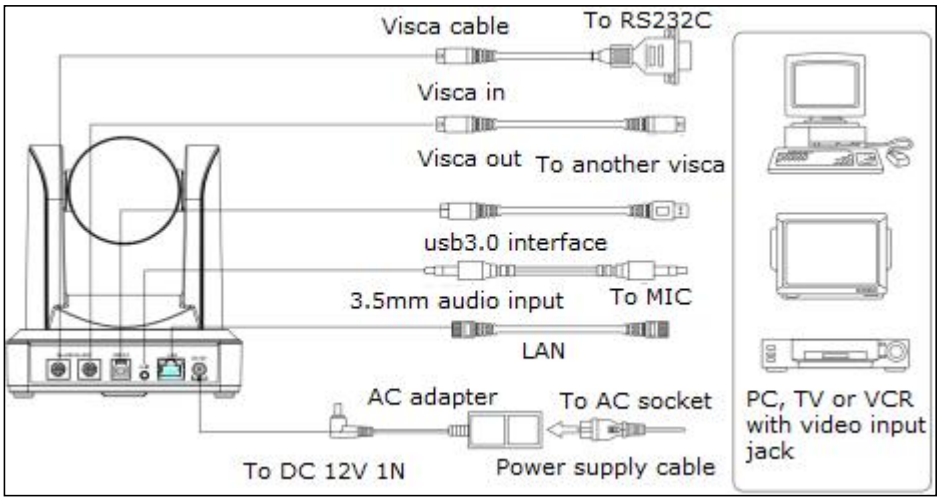

Figure 2.4 U3 model external interface diagram

3) External interface of U2 model: Audio Input, USB 2.0 Output, LAN, DC12V Power Interface.

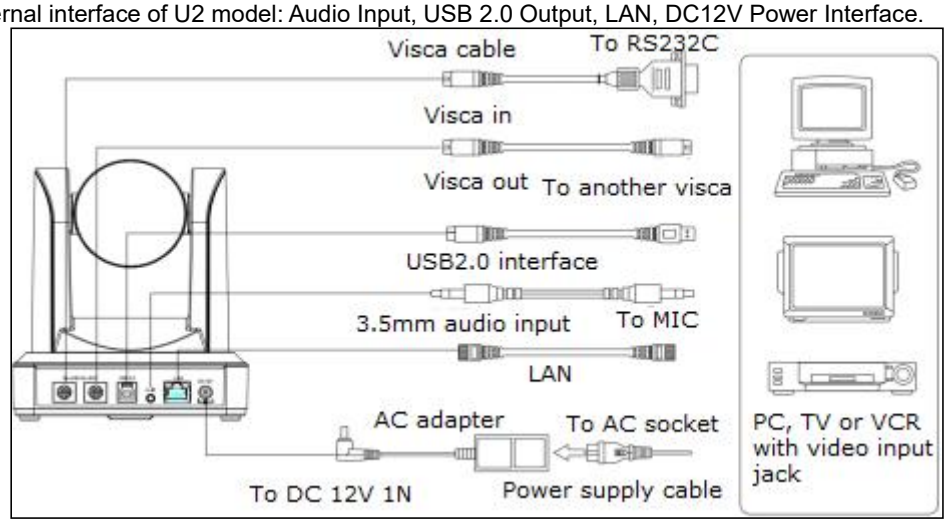

Figure 2.5 U2 model external interface diagram

4) External interface of HD model: Audio Input, HD-BaseT Output, LAN, DC12V Power Interface.

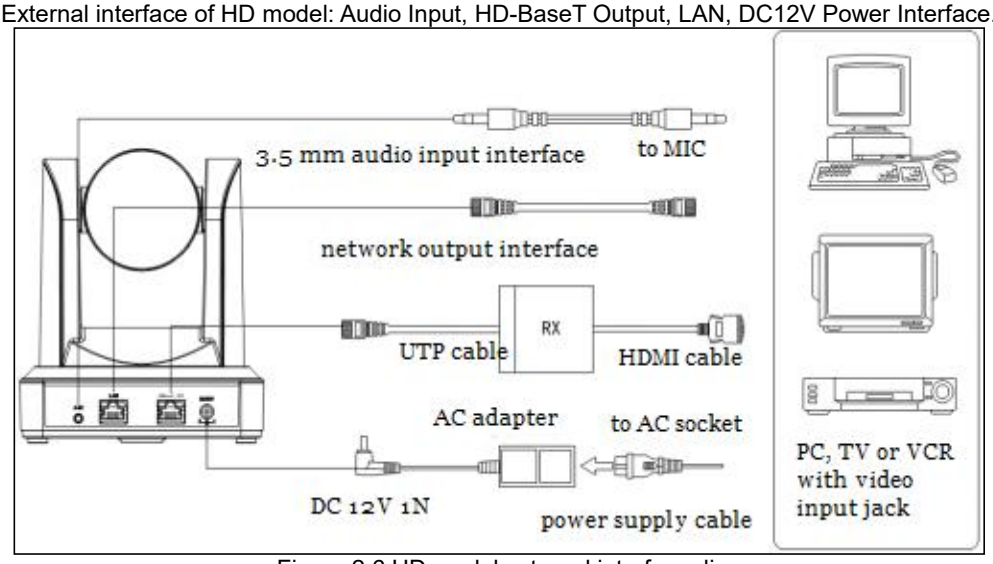

Figure 2.6 HD model external interface diagram

2.4.2 Bottom Dial Switch

ST model , U3 model and U2 model Bottom Dial Switch diagram shown in Figure 2.6 and 2.7:

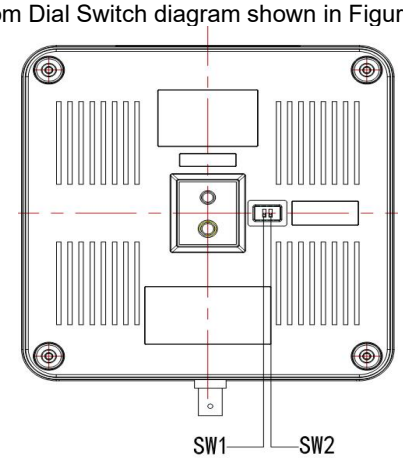

Figure 2.6 Bottom Dial Switch diagram

ST model:two DIP switches are set to ON or OFF to select different modes of operation as shown in Table 2.2

Table 2.2 Dial Switch setting

No.	SW2	SW1	Explanation
1	OFF	OFF	Software Upgrade Mode
2	ON	ON	Working Mode

U3 model:two DIP switches are set to ON or OFF to select different modes of operation as shown in Table 2.3

Table 2.3 Dial Switch setting

No.	SW2	SW1	Explanation
1	ON	OFF	Working Mode
2	ON	ON	USB3.0 Software Upgrade Mode
3	OFF	ON	ARM Software Upgrade Mode

Model U2:two DIP switches are set to ON or OFF to select different modes of operation as shown in Table 2.4

Table 2.4 Dial Switch setting

No.	SW2	SW1	Explanation
1	ON	OFF	Working Mode
2	OFF	ON	ARM Software Upgrade Mode

Model HD:two DIP switches are set to ON or OFF to select different modes of operation as shown in Table 2.5

Table 2.5 Dial Switch setting

No.	SW2	SW1	Explanation
1	ON	OFF	Working Mode
2	OFF	ON	ARM Software Upgrade Mode

Note: Working mode can be applicable for web upgrade.

2.4.3 RS-232 Interface

1) ST model RS-232C interface specification as shown below

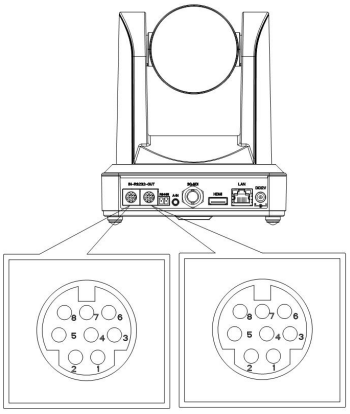

Computer or keyboard and camera connection method

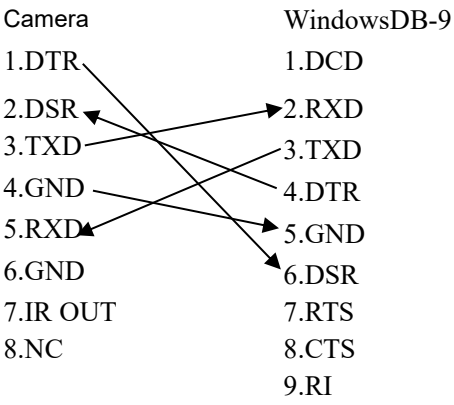



2) RS-232 Mini-DIN 8-pin Port Definition

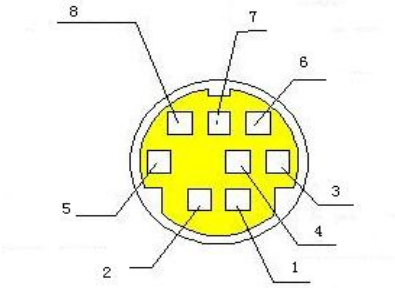

NO.	Port	Definition
1	DTR	Data Terminal Ready
2	DSR	Data Set Ready
3	TXD	Transmit Data
4	GND	System Ground
5	RXD	Receive Data
6	GND	System Ground
7	IR OUT	IR Commander Signal
8	NC	No Connection

3) RS232 (DB9) Port Definition

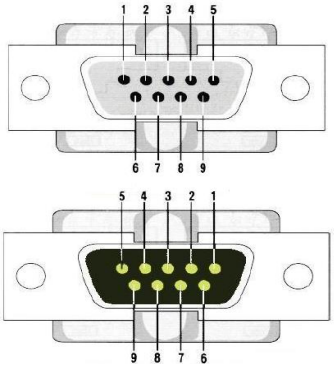

NO.	Port	Definition
1	DCD	Data Carrier Detect
2	RXD	Receive Data
3	TXD	Transmit Data
4	DTR	Data Terminal Ready
5	GND	System Ground
6	DSR	Data Set Ready
7	RTS	Request to Send
8	CTS	Clear to Send
9	RI	Ring Indicator

5) VISCA networking as shown below:

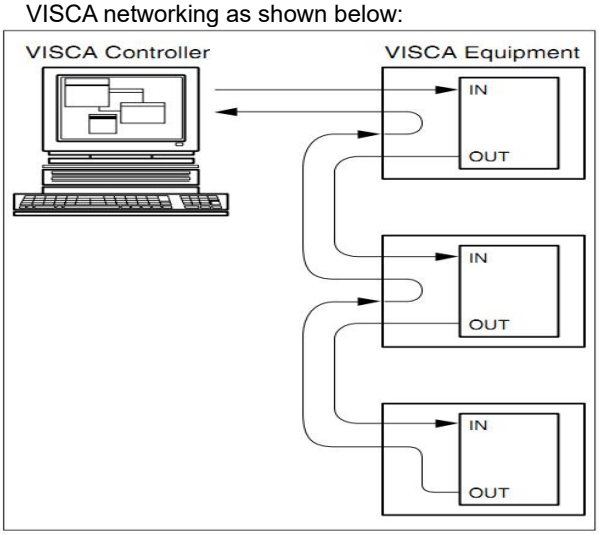

Camera cascade connection method

Camera 1	Camera 2
1.DTR	1.DTR
2.DSR	2.DSR
3.TXD	3.TXD
4.GND	4.GND
5.RXD	5.RXD
6.GND	6.GND
7.IR OUT	7.OPEN
8. NC	8.OPEN

Note: All models have RS232 input and output interface, so you can cascade as the above way.

3. Application Instruction

3.1 Video Output

3.1.1 Power-On Initial Configuration

Connecting the power, camera will have initial configuration, R indicator light will be flashing. When the camera return to the HOME position (middle position for P/T),and lens finish zoom in/out, the auto-testing is finished. IR led will also stop flashing. If the preset 0 is set, camera will rotate to the 0 preset position after initial configuration.

3.1.2 Video Output

Connect to the video output cable: the user select the output mode according to the machine model.
Figure 1.4.1 is for your reference (output interface introduction for each product)

1) network output: connect this product and your computer through network cable, then open the browser, enter the camera IP address (factory default 192.168.5.163) in the address bar, then to the login page and input a user name and password (factory default are “admin”) ,Finally enter the preview page, and the image comes out.
(Note: If you forget your user name, password, IP address, you can manually restore the default by the remote controller key combination * #)

2)3G-SDI output or DVI (HDMI) output: Connect the monitor with the corresponding video output interface, then the monitor output image.

3)USB3.0 output: Connect this product with computer USB3.0 interface (blue),open the Device Manager to see whether there is an image device and whether the Universal Serial Bus controllers recognize USB3.0 device. After properly identified, open the software, choose the image device and then it will output image.

4)USB3.0 compatible with USB2.0 output: Connect this product with computer USB2.0 interface (black),open the Device Manager to see whether there is an image device and whether the Universal Serial Bus controllers recognize USB3.0 device. After properly identified, open the software, choose the image device and then it will output image.

3.2 Remote Controller



3.2.1 Keys Instruction

1. Standby Key

After 3S long press, the camera will step into standby mode. Long press 3S again, the camera will self-test again and back to HOME position. (Note: If power-on mode is turned on and Preset 0 is set, and there is no operation within 12s, it will automatically point to the specified preset position.

2. Camera Address Selection

Select the camera **address** which wants to be controlled

3. Number Key

Set or run 0-9 presets

4,*,# Key

Key combination use

5. Focus Control Key

Auto Focus: Enter into auto focus mode.

Manual Focus: The camera focus mode is manual

Switch the camera focus mode to manual focus by pressing [focus +] or [focus -] to adjust.

6. Zoom Control Key

Zoom＋:Lens near

Zoom－:Lens far

7. Set or Clear Preset key:

Set Preset: Set preset key + 0-9 number key:

Clear Preset key: Clear preset key + 0-9 number key

8. Pan/Tilt Control Key

Press ▲Key :Up

Press ▼Key :Down

Press ◀Key :Left

Press ▶Key: Right

“HOME” Key: Return to the middle position or enter into the next level menu

9. BLC Control Key

Back Light ON / OFF: Turn on or off the back light

10. Menu Setting

Open or close the OSD menu

Enter / exit the OSD menu or return to the previous menu.

11. Camera IR Remote Control Address Setting

【*】+【＃】+【F1】:Camera Address No.1

【*】+【＃】+【F2】:Camera Address No. 2

【*】+【＃】+【F3】:Camera Address No. 3

【*】+【＃】+【F4】:Camera Address No. 4

12. Key Combination Functions

1) 【#】+【#】+【#】:Clear all presets
2) 【*】+【#】+【6】:Restore factory defaults
3) 【*】+【#】+【9】:Flip switch
4) 【*】+【#】+Auto: Enter into the aging mode
5) 【*】+【#】+【3】:Menu set to Chinese
6) 【*】+【#】+【4】:Menu set to English
7) 【*】+【#】+Manual: Restore the default user name, password, and IP address
8) 【#】+【#】+【0】:Switch the video format to 1080P60
9)【#】+【#】+【1】: Switch the video format to 1080P50
10)【#】+【#】+【2】:Switch the video format to 1080I60
11)【#】+【#】+【3】:Switch the video format to 1080I50
12)【#】+【#】+【4】:Switch the video format to 720P60
13)【#】+【#】+【5】:Switch the video format to 720P50
14)【#】+【#】+【6】:Switch the video format to 1080P30
15)【#】+【#】+【7】:Switch the video format to 1080P25
16)【#】+【#】+【8】:Switch the video format to 720P30
17)【#】+【#】+【9】:Switch the video format to 720P25

3.2.2 Applications

Finishing initialization, it can receive and execute the IR commands. Press the remote controller button, the indicator light is flashing; release the button, the indicator light stops flashing. Users can control the pan/tilt/zoom, setting and running preset positions via the IR remote controller.

Key Instruction:

1. In this instruction, “press the key” means a click rather than a long-press, and a special note will be given if a long-press for more than one second is required.

2. When a key-combination is required, do it in sequence. For example,“ 【 *】+【#】+【F1】”means press“【*】”first and then press“【#】” and last press“【F1】”.

1) Camera Selection



Select the camera address to control.

2) Pan/Tilt Control



Up: press ▲ Down: press ▼

Left: press ◄ Right: press ►

Back to middle position: press“【HOME】”

Press and hold the up/down/left/right key, the pan/tilt will keep running, from slow to fast, until it runs to the endpoint; the pan/tilt running stops as soon as the key is released.

3) Zoom Control

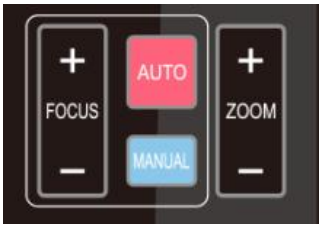

ZOOM IN: press “ZOOM ▲“ key

ZOOM OUT: press “ZOOM ▼” key

Press and hold the key, the camera will keep zooming in or zooming out and stops as soon as the key is released.

4) Focus Control

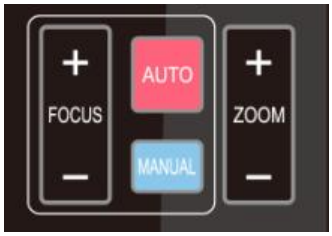

Focus (near):Press “【focus+】” key (Valid only in manual focus mode)

Focus (far): Press “【focus-】”key (Valid only in manual focus mode)

Auto Focus: Support

Manual Focus: Support

Press and hold the key, the action of focus will keep continue and stops as soon as the key is released.

5) BLC Setting



BLC ON / OFF: support

6) Presets Setting, Running, Clearing





1. Preset setting: to set a preset position, the users should press the "【SET PRESET】" key first and then press the number key 0-9 to set a relative preset,

Note: 10 preset positions in total are available by remote controller.

2. **Preset Running:** Press a number key 0-9 directly to run a relative preset.

Note: Action in vain if a relative preset position is not existed.

3. Preset clearing : to clear a preset position, the user can press the "【CLEAR PRESET】" key first and then press the number key 0-9 to clear the relative preset;

Note : press the"【#】" key three times continually to cancel all the presets.

7) Camera Remote Controller Address Setting



【*】+【＃】+【F1】:Camera Address No.1
【*】+【＃】+【F2】:Camera Address No. 2
【*】+【＃】+【F3】:Camera Address No. 3
【*】+【＃】+【F4】:Camera Address No. 4

3.3 MENU SETTING

3.3.1 Main Menu

In normal working mode, press 【MENU】key to display the menu, using scroll arrow to point at or highlight the selected items.

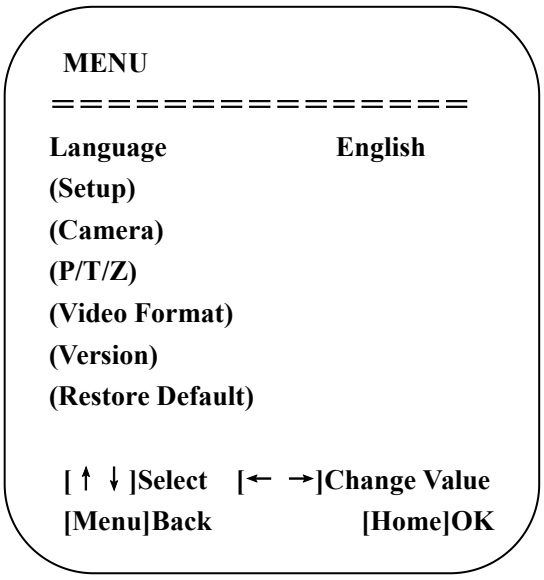

LANGUAGE: Language setting, Chinese / English

SETUP: System setting

CAMERA OPTION: Camera setting

PTZ OPTION: Pan tilt setting

VERSON: camera version setting

Restore Default: Reset setting

[↑↓] Select: for selecting menu
[← →] Change Value: for modify parameters
[MENU] Back: Press [MENU] to return
[Home] OK: Press [Home] to confirm

3.3.2 System Setting

Move the pointer to the (Setup) in the Main Menu, click the【HOME】key and enter into the (System Setting) as shown below,

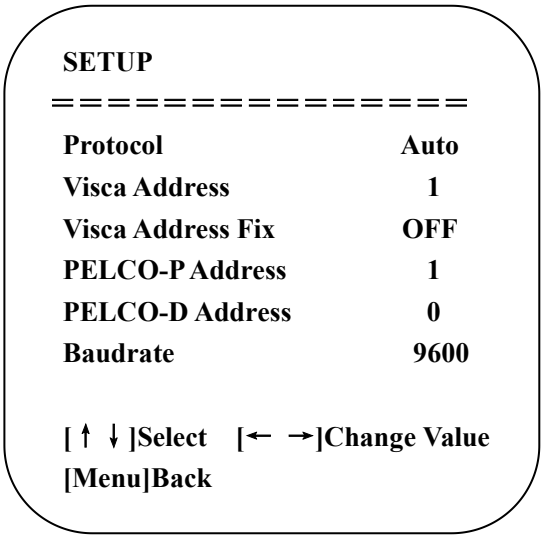

PROTOCOL: VISCA/Pelco-P/Pelco-D/Auto

Visca ADDR: VISCA=1~7 Pelco-P=1~255 Pelco-D = 1~255

Baud rate: 2400/4800/9600/115200

Visca Address Fix: On/Off

3.3.3 Camera Setting

Move the pointer to the (CAMERA) in the Main Menu, click the【HOME】key and enter the (CAMERA) as follow,

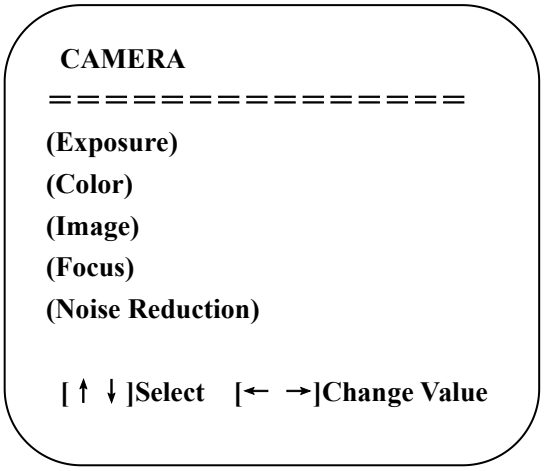

EXPOSURE: Enter into Exposure setting

COLOR: Enter into color setting

Image: Enter into image setting
Focus: Enter into focus setting
Noise Reduction: Enter into noise reduction

1) EXPOSURE SETTING

Move the pointer to the (EXPOSURE) in the Main Menu, click the【HOME】and enter the (EXPOSURE SET) as follow,

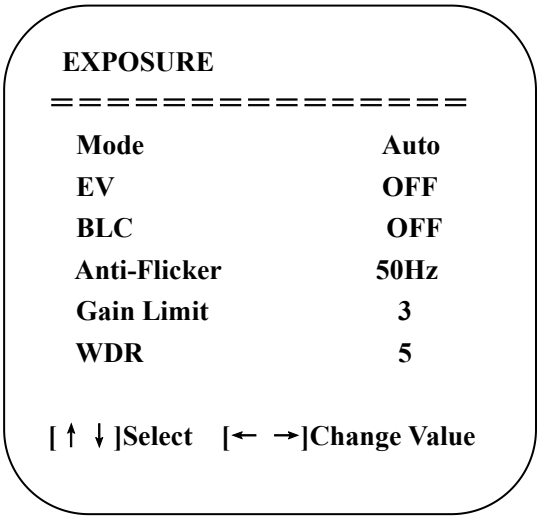

Mode : Auto, Manual, Shutter priority, Iris priority and Brightness priority.

EV : On/Off (only available in auto mode)

Compensation Level: -7~7 (only available in auto mode when EV is ON)

BLC: ON/OFF for options (only available in auto mode)

Anti-Flicker: OFF/50Hz/60Hz for options (only available in Auto/Iris **priority**/Brightness **priority** modes)

Gain Limit: 0~15(only available in Auto/ Iris **priority** /Brightness **priority** mode)

WDR: Off,1~8

Shutter

Priority:1/25,1/30,1/50,1/60,1/90,1/100,1/120,1/180,1/250,1/350,1/500,1/1000,1/2000,1/3000,1/4000,1/6000,1/10000(only available in Manual and Shutter priority mode)

IRIS Priority:OFF,F11.0,F9.6,F8.0,F6.8,F5.6,F4.8,F4.0,F3.4,F2.8,F2.4,F2.0,F1.8(only available in Manual and Iris priority mode)

Brightness: 0~23 (only available in Brightness **priority** mode)

2) COLOR SETTING

Move the pointer to the (COLOR) in the Main Menu, click the【HOME】and enter the (COLOR SET) as follow,

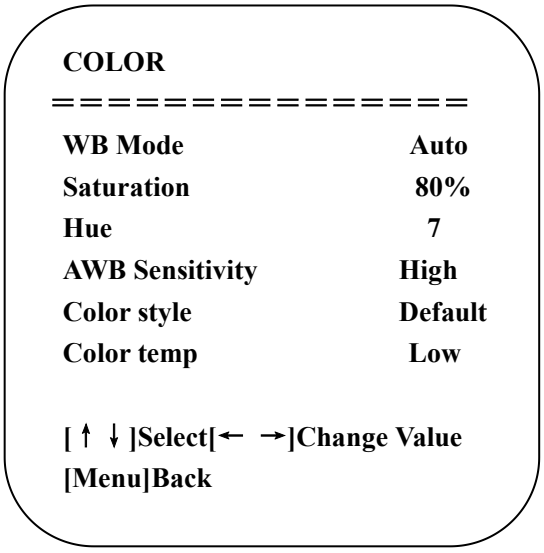

WB Mode: Auto,3000K,4000K,5000K,6500K,Manual,One Push

Red Gain: 0~255(only available in Manual mode)

Blue Gain: 0~255(only available in Manual mode)

Saturation: 60%,70%,80%,90%,100%,110%,120%,130%

Hue: 0~14

AWB Sensitivity: high/middle/low

Color Style: Default, style1~4.

Color Temp: high/middle/low

3) IMAGE

Move the pointer to the (IMAGE) in the Menu, click the【HOME】and enter the (IMAGE) as follow,

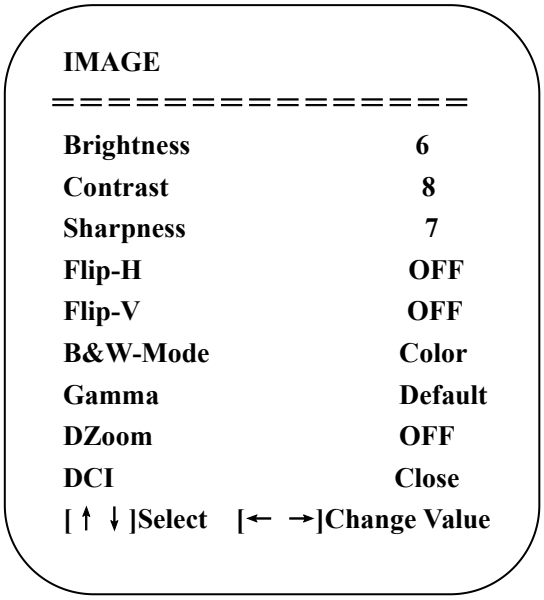

Brightness: 0~14
Contrast: 0~14
Sharpness: 0~15
Flip-H: On/Off
Flip-V: On/Off
B&W Mode: color, black/white
Gamma: default, 0.47, 0.50, 0.52, 0.55
DZoom: digital zoom options: On/Off
DCI: Dynamic Contrast: Off,1～8

4) FOCUS

Move the pointer to the (FOCUS) in the Menu, click the【HOME】and enter the (FOCUS) as follow,

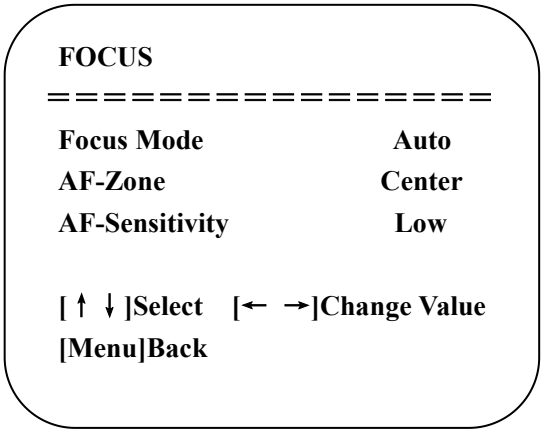

Focus Mode: Auto, manual
AF-Zone: Up, middle, down
AF-Sensitivity: High, middle, low

5) NOISE REDUCTION

Move the pointer to the (NOISE REDUCTION) in the Menu, click the【HOME】and enter the (NOISE REDUCTION) as follow,

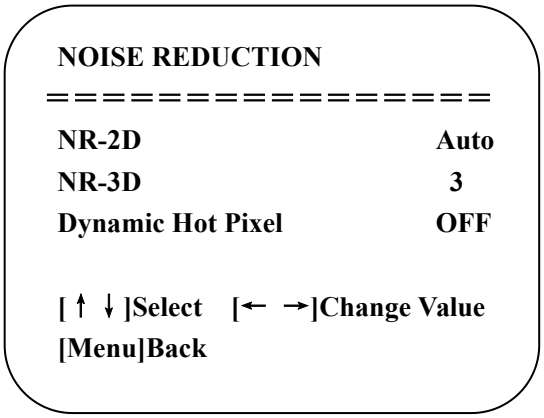

2D Noise Reduction: Auto, close, 1~7
3D Noise Reduction: Close, 1~8
Dynamic Hot Pixel: Close, 1~5

3.3.4 P/T/Z

Move the pointer to the (P/T/Z) in the Main Menu, click the【HOME】and enter the (P/T/Z) as follow,

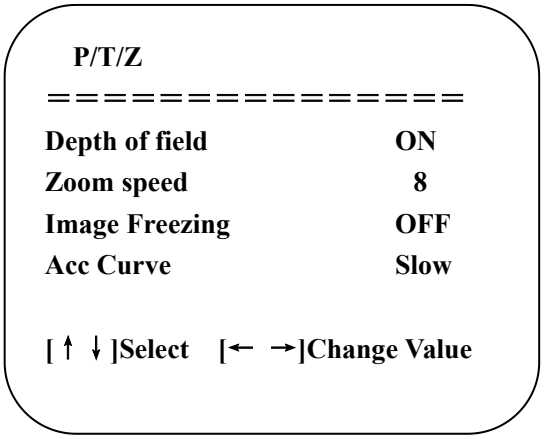

Depth of Field: Only effective for remote controller, On/ Off;
When zoom in, the PT control speed by remoter will become slow),
Zoom Speed: Set the zoom speed for remote controller,1~8
Image Freezing: On/Off
Accelerating Curve: Fast/slow

3.3.5 Video Format

Move the pointer to the (**Video Format**) in the Menu, click the【HOME】and enter the (**Video Format**) as follow,

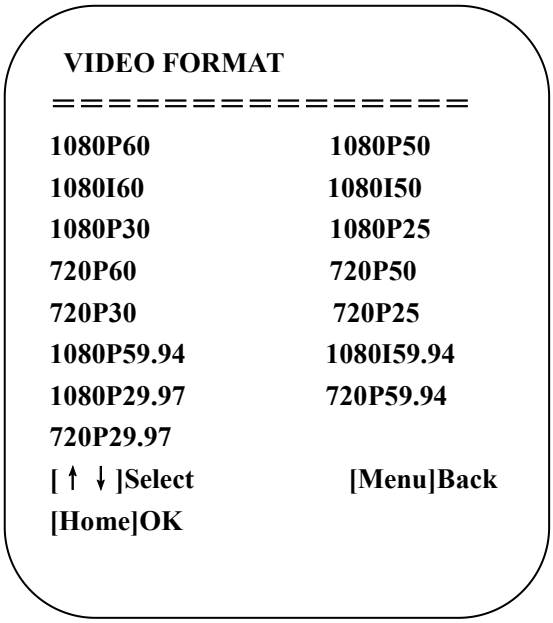

Note: 1. S: 1080P60 Downward Compatibility; M: 1080P30 Downward Compatibility
2. Exit menu after modifying parameter to save it after powered off

3.3.6 Version

Move the pointer to the (VERSION) in the Main Menu, click the【HOME】and enter the (VERSION) as follow,

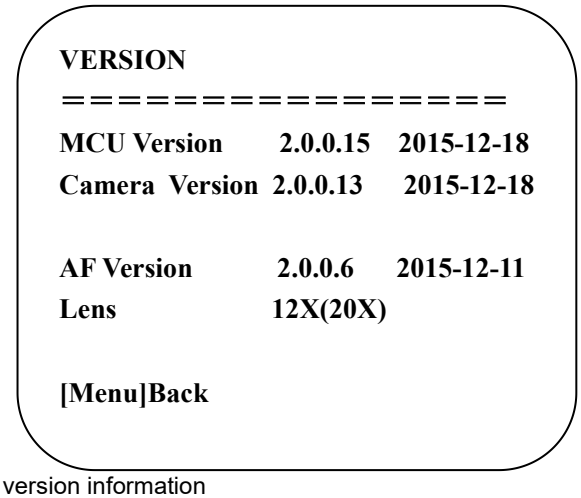

MCU Version: Display MCU version information
Camera Version: Display camera version information
AF Version: Display the focus version information
Lens: Display the lens zoom

3.3.7 Restore Default

Move the pointer to the (RESTORE DEFAULT) in the Main Menu, click the【HOME】and enter the (RESTORE DEFAULT) as follow,

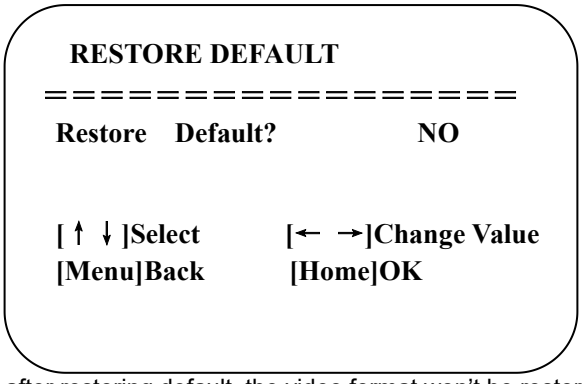

Restore default: options: yes/no; after restoring default, the video format won't be restored.

Note: If the address of former remoter is not 1 but another one from 2,3,4,the corresponding camera address will restore to 1 when all parameters or system parameters are restored. User should change the remoter address to be 1 (press No.1 according to the camera so to get normal operation)

4. Network Connection

4.1 Connecting Mode

Direct connection: Connect the camera and computer by network connecting cable.
Internet connection mode: Connect the camera to Internet by Router or Switch and user can log in the device by browser.

Note: Please do not put the power and network cable in places where can be easily touched to prevent video quality lowered by unstable signal transmission due to poor contact of cables.

The computer must have the network segment where the camera IP address belongs to. The device will not be accessible if without the segment. I.E. The camera default IP address is 192.168.5.163, then segment 5 must be added in the computer. Specific steps are as below:

Firstly open the window of Local Area Connection Properties on computer, select the "Internet protocol version 4(TCP/IPv4)" as shown by picture on the left. Double click or click the property "Internet" protocol version 4 (TCP/IPv4)to enter into the Internet Protocol Version 4(TCP/IPv4) Properties window, select "Advanced" to enter into the Advanced TCP/IP Setting and add IP and subnet mask in the IP browser as picture shown below. Click the "Confirm" to finish the

adding of IP segment. User can add the corresponding network segment according to the revised IP address of the camera.

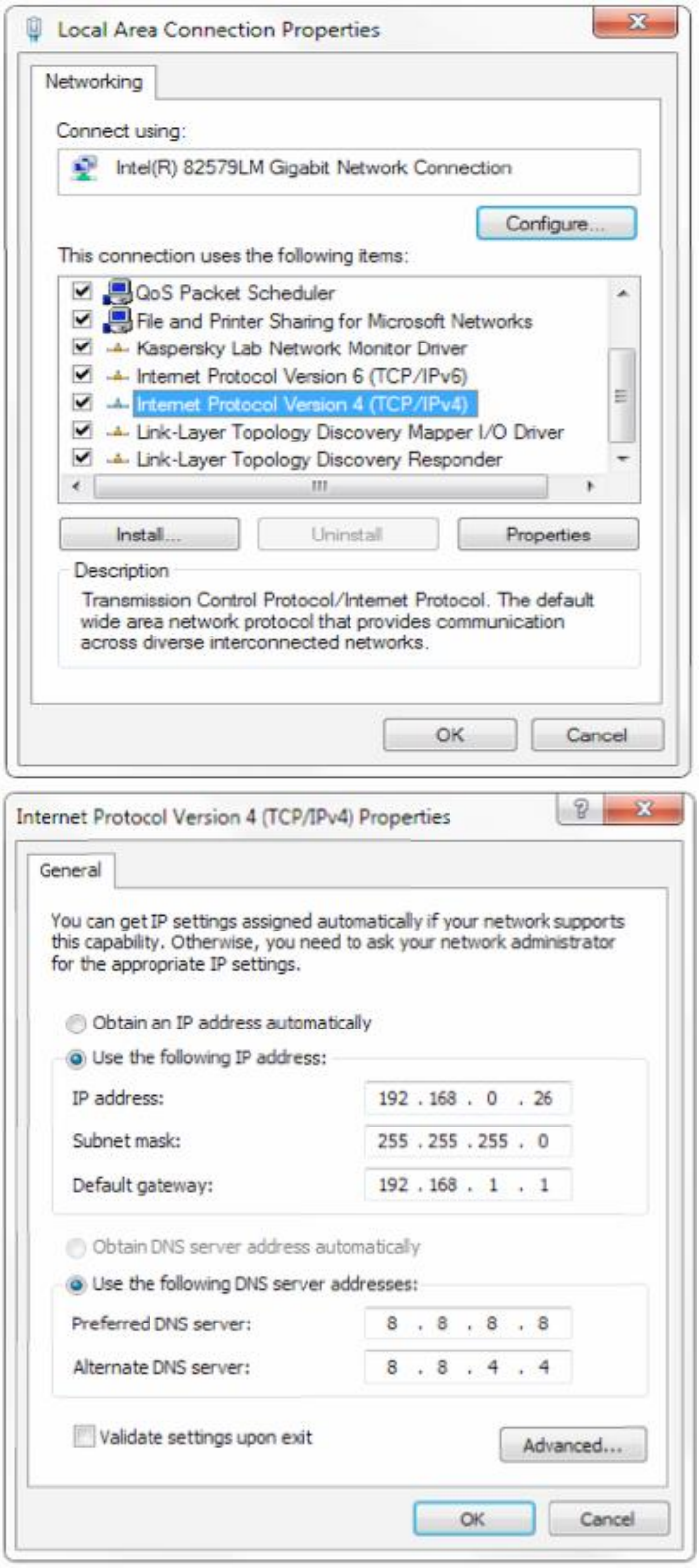

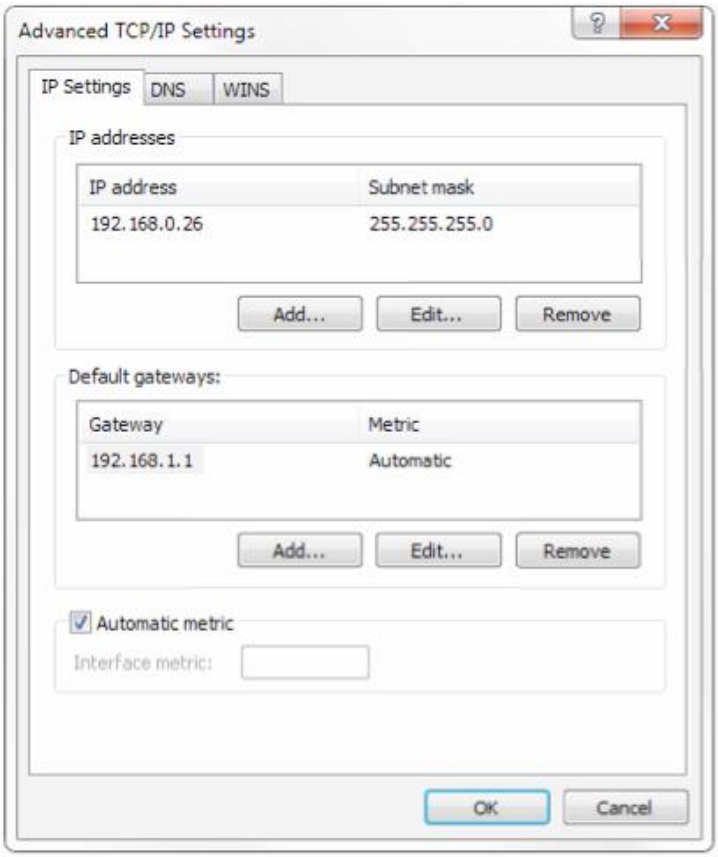

Note: The IP address to be added cannot be same with that of other computers or devices. The existence of this IP address needs to be verified before adding.

Click the “Start” and select “Operation” to input cmd as picture below to verify if the network segment has been successfully added.

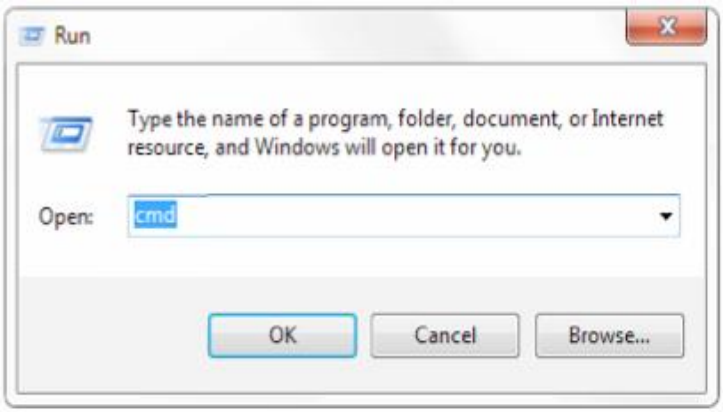

Click “OK” and open the DOS command window, input ping 192.168.5.26 and press Enter key, it will show message as below: which means network segment adding is succeed.

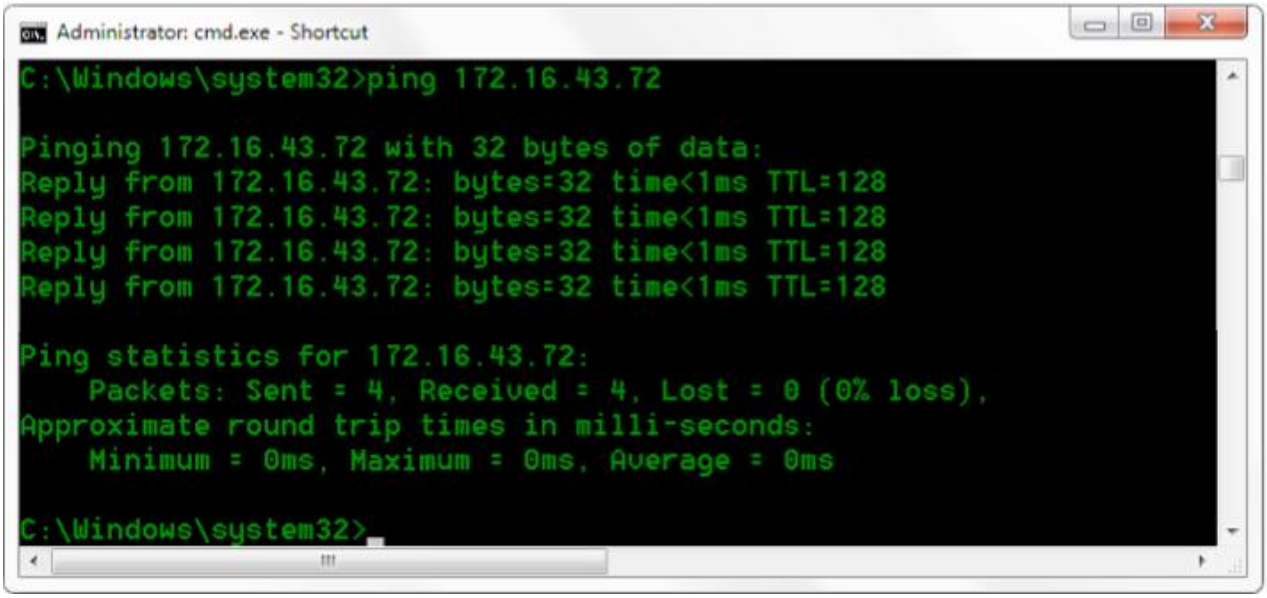

User can also to verify network connection as steps above mentioned after the finish of camera self-check. If IP is default, open DOS command window and input 192.168.5.163,then press Enter key. It will show message as below: which means network connection is normal.

4.2 IE Log In

4.2.1 Web client

1) Web client Log In

Input the IP address 192.168.5.163 of the device in the address filed of browser and click Enter button to enter into Web Client login page as below picture. User can login as administrator and normal user. If login as administrator (Default User name/Password: admin), users can preview, playback, configuration and cancel in the Web Client; If login in as normal user(Default User name/Password:user1 or user2),users can only preview, playback and cancel, no option for configuration.

Note: Web access supported browsers: IE,360 browser and other conventional browser.

2)Download/Install Plug in

When first using IE browser to access the web conferencing camera, the login page will appear “Playback plug-in is not installed, please download and install!”. Click on this message, download and install MRWebXinstall.exe, according to information prompts.

After installing the plug, enter user name and password, click and Sign (initial default user name and password: "admin", users can change the user name and password on their own after entering) into the Web client management interface.

4.2.2 Preview

After successful login into the management interface, it enters the video preview interface. In the preview screen, users can control PTZ, zoom, focus, video capture, sound, focus, full screen and set the preset position, run, delete and other operations.

1) Login as administrator

User name, password, the default admin

PTZ control can be carried out, zoom, focus, video capture, sound, zoom, full screen and set the preset position, run, and delete; you can preview, playback, configuration, log off.

2) Login as normal user

Default User name/password: user1 or user2

PTZ control can be carried out, zoom, focus, video capture, sound, zoom, full screen and set the preset position, un,and delete; you can preview, playback and log off.

NOTE: There is no configuration right for normal user login.

4.2.3 Playback

1) Playback video files

First,please record,snapshot and save the file when previewing.Click "Playback" to enter recording file and picture files playback page ,and then select the file "Video File" and click Search,and search out the video file,click Play to play the video file.

2) Playback picture files

First,please record,snapshot and save the file when previewing.Click "Playback" to enter recording file and picture files playback page ,and then select the file "Image File" and click Search,and search out the video file,click Play to play the image file.

4.2.4 Configuration

Click **Configuration** to enter into the device parameters setting page

There are the following options: Local configuration,audio configuration,video configuration,network configuration,PTZ configuration,internet access configuration,system configuration,detailed description see the following table.

Menu	Explanation
Local configure	Including video preview mode,record video packing time,record video storage route settings etc.
Audio configure	Including audio compressing format,sampling frequency,sampling precision,compressing code rate settings etc.
Video configure	Including video encoding,video parameters,character-overlapping,character size,video output setting etc.
Network configure	Including basic parameters,Ethernet,DNS,wireless network setting, GB28181 etc.
System configure	Including equipment property,system time,user management,version update,Reset,Reboot device settings etc.

1) Local configuration

Video Preview Mode: user can choose real-time priority or fluency priority: The delay will be small when under real time priority mode and fluency will be good when under fluency priority mode. Setting based on the user need (Default value: real time normal (2),real time best (1),fluency normal (3),fluency good (4) and fluency best (5))

Recording packing time(minute): Set recording video packing time (default is 10,range from 1~120 minutes)

Recording/Snapshot file storage route: Set local recording video/snapshot file storage route.(Default D:\MyIPCam\)

Click the **Save** button to make settings effective.

2) Audio Configuration

Switch: Choose to enable the audio or not.

Compressing format:Set audio compressing format and the device will reboot automatically after change (default MP3,PCM,AAC optional)

Sampling frequency:Set sampling frequency and the device will reboot automatically after change (default 44100,16000,32000 and 48000 optional)

Sampling precision: Set sampling precision (default 16bits)

Compressing code rate: Set audio compressing code rate (default 64bits,32,48,96,128bits optional)

Note Click "SAVE",it will remind"Enable has changed. Restart the device to take effect after the success of the save.",then please reboot the camera to make new setting effect.

4.2.5 Video configuration

1) Video encoding

Code stream:Stream: Different video output mode setting,use different streams. (Main stream,secondary stream)

Compression Format: Set the video compression format,save and reboot to take it effect (primary / secondary stream default:H.264,H.265 optional)

Video Size: Set video image resolution,save and reboot to take it effect (main stream default 1920 * 1080 or 1280 * 720 optional; default secondary stream 640 * 320,320 * 180,1280 * 720,1920 * 1080 optional)

Stream Rate control: Set rate control mode,save and reboot to take it effect (Primary / secondary stream default variable bit rate,fixed rate is for option).
Image Quality: Set the image quality,image quality can be changed only when rate control is variable bit rate,(main stream defaulted is better,secondary stream default is not good,there are best,better,good,bad,worse,worst for options).
Rate (Kb / s): Set the video bit rate (main stream default 4096Kb / s,64-12288Kb / s optional; secondary stream default 1024Kb / s,64-10240Kb / s optional).
Frame rate (F / S): Set the video frame rate (primary / secondary stream default 25F / S,primary stream 5-60F/S optional,secondary stream 5-30F / S optional).
Key frame interval: Set the key frame interval (primary / secondary stream default 75F,primary / stream 1-300F optional. secondary stream 1-150F optional).

Minimum QP of Keyframe : set keyframing minimum QP (default 10,10-51 optional)
Stream Name: When receiving rtsp or rtmp stream, the user can modify the stream name; the main stream (default live / av0), secondary stream (default live / av1)
Note: Usually reserve LIVE,but only modify the latter part.
Click the "Save" button to display the "saved successfully" message,then settings take effect.

2) Stream Release
Switch: To turn on/off the main / secondary stream.
Protocol: primary / secondary stream applies RTMP protocol.
Host Port: server port number (default 1935,0-65535 optional)
Host Address: server IP addresses (default 192.168.5.11)
Stream Name: choose a different stream name (live / av0,live / av1 optional).
User: Set the user name.
Password: Set the password.
Click on the "Save" button to display the "Save successful" message,then settings take effect.
Method of obtaining RTSP: rtsp: // device IP address: 554 / live / av0 (av0 main stream; av1 secondary stream)

3) Video Parameters
a,Focus: Focus mode,focus range,focus sensitivity can be set.
Focus Mode: set the focus mode (the default auto,manual optional)
Focus range: set the focus range (the default middle,the upper and lower optional)
Focus Sensitivity: Set the focus sensitivity (default is low,high,medium optional)

b,Exposure:Eexposure mode,exposure compensation,back light compensation,anti-flicker,gain limit,wide dynamic,shutter speed,aperture value and brightness can be set.
Exposure Mode: Set the exposure mode (the default automatic,manual,shutter priority,aperture priority,Brightness priority optional)
Exposure compensation: Exposure compensation setting is active when it is auto status (default is off).
Exposure compensation value: Set the exposure compensation value,valid when it is set for auto(default 0,-7 to 7 optional).
BLC: Set back light compensation,valid when it is auto status (default is off).
Anti-flicker: Set up anti-flicker mode,valid when status of automatic,aperture or brightness priority (default 50Hz,closed,60Hz optional).
Gain limit: set the gain limits,auto,active when it is status of aperture or brightness priority(default 3, 0-15 optional).

Dynamic range: set the dynamic range (default 5,0-8 optional).
Shutter speed: active when it is status of manual or shutter-priority (default 1/100，1/25,1/30,1/50,1/60,1/90,1/100,1/120,1/180,1/250,1/350,1/500,1/1000,1/2000,1/3000,1/4000,1/6000,1/10000 optional).

Aperture value: Set the aperture value,active when it is status of manual or aperture-priority(default F1.8,closed, F11, F9.6,F8.0,F6.8,F5.6,F4.8,F4.0,F3.4,F2 .8,F2.4,F2.0,F1.8 optional).
Brightness: Set the brightness value,active when it is a state of brightness priority (default 7,0-23 optional).

c,Color:White balance,saturation,color,white balance,sensitivity,color temperature,gain red and blue gain can be set.
White balance modes: Set the white balance mode (the default automatic,3000K,4000K,5000K,6500K,manual,One-push optional).Note: Click the “Correction” button when selected the One-push white balance mode.

Saturation: Set the saturation (default 80%,60%,70%,80%,90%,100%,110%,120%,130%,optional).
Auto white balance Sensitivity: Sensitivity Auto white balance settings (default is low,high,medium optional).
Chroma: Set the chrome (default 7,0-14 optional).
Color Temperature:set color temperature(Default setting:High,with low,middle for options)
Red Gain: Set the red gain,effective when it is manual (default 255,0-255 optional).
Blue Gain: Sets the Blue gain,effective when it is manual (default 199,0-255 optional).

d,Image:Brightness,contrast,sharpness,black and white mode,the gamma curve,Horizontal Flip and Vertical Flip can be set.

Brightness: Set the brightness (default 6,0-14 optional).
Contrast: set the contrast (default 8,0-14 optional).
Sharpness: Set the sharpness value (default 7, 0-15 optional).
Black and white mode: Set black and white mode (default color,black/white optional).
Gamma: Gamma value setting (default,0.45,0.50,0.52,0.55 optional).
Flip Horizontal: Set Flip Horizontal (default Off,On optional).
Flip Vertical: Set vertical flip (default Off,On optional).

e. Noise Reduction: 2D noise reduction,3D noise reduction and dynamic dead pixel correction available.
2D Noise Reduction: Set 2D noise reduction level (default Auto,1-7 and Off optional).
3D Noise Reduction: Set 3D noise reduction level (default 5,1-8 and Off optional).
Dynamic dead pixel correction: Set Dynamic dead pixel correction (default Off,1-8 optional).

Note: Click "Refresh"to make revision of any video parameters of a,b,c,d,e effective .

4) Character-Overlapping
Display date and time: Set whether to display the time and date (default display).
Display Title: Set whether to display the title (default display).
F**ont Color of Time:** Set font color of time and date (default white,black,yellow,red,blue optional).
F**ont Color of Title:** Set font color of title (default white,black,yellow,red,blue optional).
Moving characters: Set the display position of moving date,time and title ,click on the "up,down,left,right" buttons to move the corresponding character position.
Title Content: Set title content (default CAMERA1).
Time Content: Set time content (default 1970/01/10 05:36:00)
Click on the "Save" button and display the "Save successful" message,then valid

5)Character Size
Main stream character size: Set the character size of the display,the device will restart automatically after changed and saved (default 24,24,16 optional)
Secondary stream character size: Set the character size of the display,the device will restart automatically after changed and saved(default 16,24,16 optional)
Click on the "Save" button to display "Parameter saved successfully" message,set to take effect

6)Video output
Output Format: Set the video output format (default 1080P60,1080P50,1080P30,1080P25,1080I60,1080I50,720P60,720P50,720P30,720P25,1080P59.94,1080I59.94,1080P29.97,720P59.94,720P29.97 optional). Note: only ST and HD model have this item, U3 and U2 do not have.
Click on the "Save" button,it will be valid when display "Save successful".

7) USB subtitle
Display subtitles: Check the box (after checking, USB video output is displayed on the screen caption content)
Font color: Default white, black/ Yellow/red/blue optional
Subtitle: Users can fill in their own
Ticker: according to the user demand, down, left and right to move the display position of subtitles
Note: only U3 and U2 model have this item, ST and HD do not have.

4.2.6 Network configuration

1) Network port
Data port: set the data port,the device will restart automatically after changed(default 3000,0-65535 optional).
Web Port: Set Web port,the device will restart automatically after changed (default is 80,0-65535 is optional).
Onvif Port: Set Onvif port,the device will restart automatically after changed(default 2000,0-65535 optional).
Soap Port: Set Soap port (default 1936,0-65535 optional).
RTMP Port: Set RTMP port (default 1935,0-65535 optional).
RTSP Port: Set RTSP port,the device will restart automatically after changed (default 554,0-65535 optional).
Visca Port: Set Visca port,the device will restart automatically after changed (default 3001,0-65535 optional).
Click on the "Save" button,it will be valid when display "Save successful".
RTMP access: RTMP: / / equipment IP address: 1935 / live/av0 (av0 main stream; av1 second stream)

2) Ethernet parameters
DHCP: Enable or disable obtain IP automatically can be set. Save changes and reboot the device to takes effect (Default:OFF)
IP Address: Set the IP address,save changes and reboot the device to takes effect (default 192.168.5.163).Note: This IP address is the same with the one used to login Web page.
Subnet Mask: Set the subnet mask (default 255.255.255.0).
Default Gateway: Set the default gateway (default 0.0.0.0).
Physical Address: Set the physical address (the parameter is read-only but can not be modified).
Click on the "Save" button,it will be valid when display "Save successful". (Note: To prevent IP conflicts When modify).

3) DNS parameters
Preferred DNS server: set the preferred DNS server. (Default 0.0.0.0).
Alternate DNS server: Alternate DNS server settings. (Default 0.0.0.0).
Click on the "Save" button,it will be valid when display "Save successful".

4) GB28181
Switch: set whether open GB28181,can check
Time Synchronization: whether synchronization time is set,you can check
Stream Type: stream type setting (the default main stream,secondary stream optional)
Sign effective time (in seconds): 3600 Range 5-65535
Heartbeat time (seconds): 60 Range 1-65535
Register ID: 34020000001320000001
Register User name: IPC
Register Password: 12345678
Equipment ownership: Users can add their own
Administrative regions: Users can add their own
Alarm Zone: Users can add their own
Equipment installation address: Users can add their own
Local SIP Port: 5060 Range 0-65535
GB28181 Server Address: IP address of the computer
Server SIP Port: 5060 Range 0-65535
Server ID: 34020000002000000001
Click on the "Save" button,it will be valid when display "Save successful".

4.2.7 System configuration

1) Device Properties
Device Name: Set the device name (the default Camera1,user can add their own).
Device ID: Set the device ID (default 1,Read-Only).
System Language: Set the system language (default Simplified Chinese,English optional).Need to re-login after modify and save the setting.
Click on the "Save" button,it will be valid when display "Save successful".

2) System Time
Date Format: Set the date format (YYYY-MM-DD default That year - month - day,MM-DD-YYYY namely Month - Day - Year,DD-MM-YYYY date - month - year Optional).
Date separator: set the date separator (default '/','.','-' Optional).
Time Zone: Set the time zone (default East eight districts,other time zones optional).
Time Type: Set the time types (default 24 hours,optional 12 hours).
Time setting: Set time mode (to choose the computer time synchronization,NTP server time synchronization,or set manually).
Computer Time: Set the computer synchronization valid.
Update interval: Set the NTP server automatic updated time interval.Valid after setting NTP server synchronization (default one day,2-10 days Optional).
NTP server address or domain name: Set NTP server address or domain name (default time.nits.gov). Valid after setting NTP server synchronization.
NTP Server Port: Sets the NTP server port (default 123).Valid after setting NTP server synchronization.
Set the time manually,Effective when set manually.
Click on the "Save" button,it will be valid when display "Save successful".

3) User Management
Select users: Set the user type (the default administrator,Common User 1,Common User 2 optional)
User name: set the user name (Select User Administrator default admin; select a common user1 default user1; to select a common user 2 default user2; user can modify their own)
Password: Set a password(Select User Administrator default admin; select a common user1 default user1; to select a common user 2 default user2; user can modify their own).
Password confirmation: Confirm the input passwords are the same or not.
Click on the "Save" button to display the "Save successfully" message,then the set is to take effect.
Note: Please note the case-sensitivity of the user name and password.
If login page by a common user's name and password ,one does not have configuration privileges but can only operate to preview,playback,logoff.

4) Version upgrade
MCU version V2.0.0.16 2015-12-18
Camera version V2.0.0.16 2015-12-18
Focus version V2.0.0.6 2015-12-11
Users only read the version information above which is consistent with the menu version but can not modify.Different types of the machine has different information.
Update file:
Click "Browse ..." installation,to select the upgrade file in the pop-up window.

Click on the "Upgrade" button,the upgrade dialog will appear. the device will reboot automatically after update successfully. (Note: make sure the power and network is keeping connected during the process.or the upgrade will fail)

Note: After the version upgrade is complete, you need to restore factory defaults; a, through web to restore the factory default configuration; b, through the recovery menu; c, remote control shortcut * # 6;
Choose one of the above three ways. If chose a, the IP accounts, passwords also need to be restored to the default.

5) Restore factory setting
Click on pop-up "Restore Factory Defaults" button and choose “yes” or “no”,then the device will restart automatically and restore factory setting .

6) Reboot
Click on the pop-up "Reboot" button and choose “yes” or “no”,then the device will restart automatically

4.2.8 Logout
Point "Logout" pop-up "Confirmation" dialog; select "Yes" or "No",choose “Yes” to exit the current page and return to the user login interface again.

4.2.9 Wireless network
If the user's equipment has a wireless network module,Web page "Network Configuration" has "Wireless Network" configuration page,the specific configuration is as follows:

1）Network settings

Wireless network configuration:

Network interface enable: can check,to set the following items after checked.
DHCP:can check,if check,it can obtain IP automatically.
IP address:set wirelss WIFI IP(default 192.168.1.250,if checked DHCP,IP could assigned automatically)
Note:wireless IP address can not be in the same segment with wired IP address.
Subnet Mask: Set the wireless IP subnet mask (default255.255.255.0)
Default Gateway: Set the wireless IP default gateway (default 192.168.1.1)
SSID: The user can modify their own (the default test)
Encryption: can check,the password can be set after checked.
Password: can set password,password can be changed if only checked encryption.
Click on the "Save" button to display "Parameter saved successfully" message,set to take effect
Note: SSID and password should be filled in correctly, otherwise, if restarted after the powered off, the wireless WiFi connection is not successful.

2)WiFi hot link
Click on the “search” button to search the WIFI hotspot.
Double-click the dialog box after searched user WIFI hotspot,and then input password to connect WIFI. It connected successfully after shown “successful connect” window.

3)Wireless WiFi login page
If you do not check the above configuration DHCP (automatically obtain IP),then open the browser,enter the wireless network IP address in the address bar (default 192.168.1.250),press Enter to log construction;If you checked DHCP,then you obtain IP automatically,just login specific router or switch user interface settings to view the allocation of IP address.

5. Serial Communication Control

Under common working condition,the camera could be controlled through RS232/RS485 interface(VISCA),RS232C serial parameter are as follows:

Baud rate: 2400/4800/9600/115200 bits / sec; Start bit: 1; data bits: 8; Stop bit: 1; Parity: None.
After power on,the camera first go left,then back to the middle position.Self-test is finished after the zoom moved to the farthest and then back to the nearest position. If the camera saved 0 preset before,it will be back to that position after initialization.At this point,the user can control the camera by the serial commands.

5.1 VISCA protocol list

5.1.1 Camera return command

Ack/Completion Message		
	Command packet	**Note**
ACK	z0 41 FF	Returned when the command is accepted.
Completion	z0 51 FF	Returned when the command has been executed.

z = camera address + 8

Error Messages		
	Command packet	**Note**
Syntax Error	z0 60 02 FF	Returned when the command format is different or when a command with illegal command parameters is accepted
Command Not Executable	z0 61 41 FF	Returned when a command cannot be executed due to current conditions. For example,when commands controlling the focus manually are received during auto focus.

5.1.2 Camera control command

Command	Function	Command packet	Note
AddressSet	Broadcast	88 30 0p FF	p：Address setting
IF_Clear	Broadcast	88 01 00 01 FF	I/F Clear
CommandCancel		8x 21 FF	
CAM_Power	On	8x 01 04 00 02 FF	Power ON/OFF
	Off	8x 01 04 00 03 FF	
CAM_Zoom	Stop	8x 01 04 07 00 FF	
	Tele(Standard)	8x 01 04 07 02 FF	
	Wide(Standard)	8x 01 04 07 03 FF	
	Tele(Variable)	8x 01 04 07 2p FF	p = 0(low) - F(high)
	Wide(Variable)	8x 01 04 07 3p FF	
	Direct	8x 01 04 47 0p 0q 0r 0s FF	pqrs: Zoom Position
CAM _Focus	Stop	8x 01 04 08 00 FF	
	Far(Standard)	8x 01 04 08 02 FF	
	Near(Standard)	8x 01 04 08 03 FF	
	Far(Variable)	8x 01 04 08 2p FF	p = 0(low) - F(high)
	Near (Variable)	8x 01 04 08 3p FF	
	Direct	8x 01 04 48 0p 0q 0r 0s FF	pqrs: Focus Position
	Auto Focus	8x 01 04 38 02 FF	
	Manual Focus	8x 01 04 38 03 FF	
CAM _Zoom Focus	Direct	8x 01 04 47 0p 0q 0r 0s 0t 0u 0v 0w FF	pqrs: Zoom Position tuvw: Focus Position
CAM_WB	Auto	8x 01 04 35 00 FF	

Command	Function	Command packet	Note
	3000K	8x 01 04 35 01 FF	
	4000k	8x 01 04 35 02 FF	
	One Push mode	8x 01 04 35 03 FF	
	5000k	8x 01 04 35 04 FF	
	Manual	8x 01 04 35 05 FF	
	6500k	8x 01 04 35 06 FF	
CAM _RGain	Reset	8x 01 04 03 00 FF	Manual Control of R Gain
	Up	8x 01 04 03 02 FF	
	Down	8x 01 04 03 03 FF	
	Direct	8x 01 04 43 00 00 0p 0q FF	pq: R Gain
CAM_ Bgain	Reset	8x 01 04 04 00 FF	Manual Control of B Gain
	Up	8x 01 04 04 02 FF	
	Down	8x 01 04 04 03 FF	
	Direct	8x 01 04 44 00 00 0p 0q FF	pq: B Gain
CAM_AE	Full Auto	8x 01 04 39 00 FF	Automatic Exposure mode
	Manual	8x 01 04 39 03 FF	Manual Control mode
	Shutter priority	8x 01 04 39 0A FF	Shutter Priority Automatic Exposure mode
	Iris priority	8x 01 04 39 0B FF	Iris Priority Automatic Exposure mode
	Bright	8x 01 04 39 0D FF	Bright mode
CAM_Shutter	Reset	8x 01 04 0A 00 FF	Shutter Setting
	Up	8x 01 04 0A 02 FF	
	Down	8x 01 04 0A 03 FF	
	Direct	8x 01 04 4A 00 00 0p 0q FF	pq: Shutter Position
CAM_Iris	Reset	8x 01 04 0B 00 FF	Iris Setting
	Up	8x 01 04 0B 02 FF	
	Down	8x 01 04 0B 03 FF	
	Direct	8x 01 04 4B 00 00 0p 0q FF	pq: Iris Position
CAM_Gain Limit	Gain Limit	8x 01 04 2C 0p FF	p: Gain Positon
CAM_Bright	Reset	8x 01 04 0D 00 FF	Bright Setting
	Up	8x 01 04 0D 02 FF	
	Down	8x 01 04 0D 03 FF	
	Direct	8x 01 04 4D 00 00 0p 0q FF	pq: Bright Positon
CAM_ExpComp	On	8x 01 04 3E 02 FF	Exposure Compensation ON/OFF
	Off	8x 01 04 3E 03 FF	
	Reset	8x 01 04 0E 00 FF	Exposure Compensation Amount Setting
	Up	8x 01 04 0E 02 FF	
	Down	8x 01 04 0E 03 FF	
	Direct	8x 01 04 4E 00 00 0p 0q FF	pq: ExpComp Position
CAM_Back Light	On	8x 01 04 33 02 FF	Back Light Compensation
	Off	8x 01 04 33 03 FF	
CAM_WDRStrength	Reset	8x 01 04 21 00 FF	WDR Level Setting
	Up	8x 01 04 21 02 FF	
	Down	8x 01 04 21 03 FF	
	Direct	8x 01 04 51 00 00 00 0p FF	p: WDR Level Positon
CAM_NR（2D）		8x 01 04 53 0p FF	P=0-7 0:OFF
CAM_NR（3D）		8x 01 04 54 0p FF	P=0-8 0:OFF
CAM_Gamma		8x 01 04 5B 0p FF	p = 0 – 4 0：Default 1：0.47

Command	Function	Command packet	Note
			2：0.50 3：0.52 4：0.55
CAM_Flicker	OFF	8x 01 04 23 00 FF	OFF
	50HZ	8x 01 04 23 01 FF	50HZ
	60HZ	8x 01 04 23 02 FF	60HZ
CAM_Aperture	Reset	8x 01 04 02 00 FF	Aperture Control
	Up	8x 01 04 02 02 FF	
	Down	8x 01 04 02 03 FF	
	Direct	8x 01 04 42 00 00 0p 0q FF	pq: Aperture Gain
CAM_Memory	Reset	8x 01 04 3F 00 pq FF	pq: Memory Number(=0 to 254) Corresponds to 0 to 9 on the Remote Commander
	Set	8x 01 04 3F 01 pq FF	
	Recall	8x 01 04 3F 02 pq FF	
CAM_LR_Reverse	On	8x 01 04 61 02 FF	Image Flip Horizontal ON/OFF
	Off	8x 01 04 61 03 FF	
CAM_PictureFlip	On	8x 01 04 66 02 FF	Image Flip Vertical ON/OFF
	Off	8x 01 04 66 03 FF	
CAM_ColorSaturation	Direct	8x 01 04 49 00 00 00 0p FF	P=0-7 0:60% 1:70% 2:80% 3:90% 4:100% 5:110% 6:120% 7:130%
CAM_IDWrite		8x 01 04 22 0p 0q 0r 0s FF	pqrs: Camera ID (=0000 to FFFF)
SYS_Menu	ON	8x 01 04 06 06 02 FF	Turn on the menu screen
	OFF	8x 01 04 06 06 03 FF	Turn off the menu screen
IR_Receive	ON	8x 01 06 08 02 FF	IR(remote commander)receive On/Off
	OFF	8x 01 06 08 03 FF	
IR_ReceiveReturn	On	8x 01 7D 01 03 00 00 FF	IR(remote commander)receive message via the VISCA communication ON/OFF
	Off	8x 01 7D 01 13 00 00 FF	
CAM_SettingReset	Reset	8x 01 04 A0 10 FF	Reset Factory Setting
CAM_Brightness	Direct	8x 01 04 A1 00 00 0p 0q FF	pq: Brightness Position
CAM_Contrast	Direct	8x 01 04 A2 00 00 0p 0q FF	pq: Contrast Position
CAM_Flip	OFF	8x 01 04 A4 00 FF	Single Command For Video Flip
	Flip-H	8x 01 04 A4 01 FF	
	Flip-V	8x 01 04 A4 02 FF	
	Flip-HV	8x 01 04 A4 03 FF	
CAM_VideoSystem	Set camera video system	8x 01 06 35 00 0p FF	P: 0~E Video format 0:1080P60 1:1080P50 2:1080i60 3:1080i50 4:720P60 5:720P50 6:1080P30 7:1080P25 8:720P30 9:720P25 A：1080P59.94 B：1080i59.94 C：720P59.94 D：1080P29.97 E：720P29.97

Command	Function	Command packet	Note
Pan_tiltDrive	Up	8x 01 06 01 VV WW 03 01 FF	VV: Pan speed 0x01 (low speed) to 0x18 (high speed) WW: Tilt speed 0x01 (low speed) to 0x14 (high speed) YYYY: Pan Position ZZZZ: Tilt Position
	Down	8x 01 06 01 VV WW 03 02 FF	
	Left	8x 01 06 01 VV WW 01 03 FF	
	Right	8x 01 06 01 VV WW 02 03 FF	
	Upleft	8x 01 06 01 VV WW 01 01 FF	
	Upright	8x 01 06 01 VV WW 02 01 FF	
	DownLeft	8x 01 06 01 VV WW 01 02 FF	
	DownRight	8x 01 06 01 VV WW 02 02 FF	
	Stop	8x 01 06 01 VV WW 03 03 FF	
	AbsolutePosition	8x 01 06 02 VV WW 0Y 0Y 0Y 0Y 0Z 0Z 0Z 0Z FF	
	RelativePosition	8x 01 06 03 VV WW 0Y 0Y 0Y 0Y 0Z 0Z 0Z 0Z FF	
	Home	8x 01 06 04 FF	
	Reset	8x 01 06 05 FF	
Pan-tiltLimitSet	Set	8x 01 06 07 00 0W 0Y 0Y 0Y 0Y 0Z 0Z 0Z 0Z FF	W:1 UpRight 0:DownLeft YYYY: Pan Limit Position(TBD) ZZZZ: Tilt Limit Position(TBD)
	Clear	8x 01 06 07 01 0W 07 0F 0F 0F 07 0F 0F 0F FF	

5.1.3, Inquiry command

Command	Function	Command packet	Note
CAM_PowerInq	8x 09 04 00 FF	y0 50 02 FF	On
		y0 50 03 FF	Off(Standby)
CAM_ZoomPosInq	8x 09 04 47 FF	y0 50 0p 0q 0r 0s FF	pqrs: Zoom Position
CAM_FocusAFModeInq	8x 09 04 38 FF	y0 50 02 FF	Auto Focus
		y0 50 03 FF	Manual Focus
CAM_FocusPosInq	8x 09 04 48 FF	y0 50 0p 0q 0r 0s FF	pqrs: Focus Position
CAM_WBModeInq	8x 09 04 35 FF	y0 50 00 FF	Auto
		y0 50 01 FF	3000K
		y0 50 02 FF	4000K
		y0 50 03 FF	One Push Mode
		y0 50 04 FF	5000K
		y0 50 05 FF	Manual
		y0 50 00 FF	6500K
CAM_RGainInq	8x 09 04 43 FF	y0 50 00 00 0p 0q FF	pq: R Gain
CAM_BGainInq	8x 09 04 44 FF	y0 50 00 00 0p 0q FF	pq: B Gain
CAM_AEModeInq	8x 09 04 39 FF	y0 50 00 FF	Full Auto
		y0 50 03 FF	Manual
		y0 50 0A FF	Shutter priority
		y0 50 0B FF	Iris priority
		y0 50 0D FF	Bright
CAM_ShutterPosInq	8x 09 04 4A FF	y0 50 00 00 0p 0q FF	pq: Shutter Position
CAM_IrisPosInq	8x 09 04 4B FF	y0 50 00 00 0p 0q FF	pq: Iris Position
CAM_Gain LimitInq	8x 09 04 2C FF	y0 50 0p FF	p: Gain Positon
CAM_ BrightPosiInq	8x 09 04 4D FF	y0 50 00 00 0p 0q FF	pq: Bright Position
CAM_ExpCompModeInq	8x 09 04 3E FF	y0 50 02 FF	On
		y0 50 03 FF	Off
CAM_ExpCompPosInq	8x 09 04 4E FF	y0 50 00 00 0p 0q FF	pq: ExpComp Position
CAM_BacklightModeInq	8x 09 04 33 FF	y0 50 02 FF	On
		y0 50 03 FF	Off
CAM_WDRStrengthInq	8x 09 04 51 FF	y0 50 00 00 00 0p FF	p: WDR Strength
CAM_NRLevel(2D) Inq	8x 09 04 53 FF	y0 50 0p FF	P: 2DNRLevel
CAM_NRLevel(3D) Inq	8x 09 04 54 FF	y0 50 0p FF	P:3D NRLevel
CAM_FlickerModeInq	8x 09 04 55 FF	y0 50 0p FF	p: Flicker Settings(0: OFF,1: 50Hz,2:60Hz)
CAM_ApertureInq	8x 09 04 42 FF	y0 50 00 00 0p 0q FF	pq: Aperture Gain
CAM_PictureEffectModeInq	8x 09 04 63 FF	y0 50 00 FF	Off
		y0 50 04 FF	B&W
CAM_MemoryInq	8x 09 04 3F FF	y0 50 0p FF	p: Memory number last operated.
SYS_MenuModeInq	8x 09 06 06 FF	y0 50 02 FF	On
		y0 50 03 FF	Off
CAM_LR_ReverseInq	8x 09 04 61 FF	y0 50 02 FF	On

		y0 50 03 FF	Off
CAM_PictureFlipInq	8x 09 04 66 FF	y0 50 02 FF	On
		y0 50 03 FF	Off
CAM_ColorSaturationInq	8x 09 04 49 FF	y0 50 00 00 00 0p FF	p: Color Gain setting 0h (60%) to Eh (130%)
CAM_IDInq	8x 09 04 22 FF	y0 50 0p FF	p: Gamma ID
IR_ReceiveInq	8x 09 06 08 FF	y0 50 02 FF	On
		y0 50 03 FF	Off
IR_ReceiveReturn		y0 07 7D 01 04 00 FF	Power ON/OFF
		y0 07 7D 01 04 07 FF	Zoom tele/wide
		y0 07 7D 01 04 38 FF	AF ON/OFF
		y0 07 7D 01 04 33 FF	Camera _Backlight
		y0 07 7D 01 04 3F FF	Camera _Memery
		y0 07 7D 01 06 01 FF	Pan_titleDriver
CAM_BrightnessInq	8x 09 04 A1 FF	y0 50 00 00 0p 0q FF	pq: Brightness Position
CAM_ContrastInq	8x 09 04 A2 FF	y0 50 00 00 0p 0q FF	pq: Contrast Position
CAM_FlipInq	8x 09 04 A4 FF	y0 50 00 FF	Off
		y0 50 01 FF	Flip-H
		y0 50 02 FF	Flip-V
		y0 50 03 FF	Flip-HV
CAM_GammaInq	8x 09 04 5B FF	y0 50 0p FF	p: Gamma setting
CAM_VersionInq	8x 09 00 02 FF	y0 50 ab cd mn pq rs tu vw FF	ab cd : vender ID (0220) mn pq : model ID ST (0950) U3（3950） rs tu : ARM Version vw : reserve
VideoSystemInq	8x 09 06 23 FF	y0 50 0p FF	P: 0~E Video format 0:1080P60 1:1080P50 2:1080i60 3:1080i50 4:720P60 5:720P50 6:1080P30 7:1080P25 8:720P30 9:720P25 A：1080P59.94 B：1080i59.94 C：720P59.94 D：1080P29.97 E：720P29.97
Pan-tiltMaxSpeedInq	8x 09 06 11 FF	y0 50 ww zz FF	ww: Pan Max Speed zz: Tilt Max Speed
Pan-tiltPosInq	8x 09 06 12 FF	y0 50 0w 0w 0w 0w 0z 0z 0z 0z FF	wwww: Pan Position zzzz: Tilt Position

Note:[X] in the above table indicates the camera address to be operated,【y】=【x + 8】.

5.2,Pelco-D protocol command list

Function	Byte1	Byte2	Byte3	Byte4	Byte5	Byte6	Byte7
Up	0xFF	Address	0x00	0x08	Pan Speed	Tilt Speed	SUM
Down	0xFF	Address	0x00	0x10	Pan Speed	Tilt Speed	SUM
Left	0xFF	Address	0x00	0x04	Pan Speed	Tilt Speed	SUM
Right	0xFF	Address	0x00	0x02	Pan Speed	Tilt Speed	SUM
Upleft	0xFF	Address	0x00	0x0C	Pan Speed	Tilt Speed	SUM
Upright	0xFF	Address	0x00	0x0A	Pan Speed	Tilt Speed	SUM
DownLeft	0xFF	Address	0x00	0x14	Pan Speed	Tilt Speed	SUM
DownRight	0xFF	Address	0x00	0x12	Pan Speed	Tilt Speed	SUM

Zoom In	0xFF	Address	0x00	0x20	0x00	0x00	SUM
Zoom Out	0xFF	Address	0x00	0x40	0x00	0x00	SUM
Focus Far	0xFF	Address	0x00	0x80	0x00	0x00	SUM
Focus Near	0xFF	Address	0x01	0x00	0x00	0x00	SUM
Set Preset	0xFF	Address	0x00	0x03	0x00	Preset ID	SUM
Clear Preset	0xFF	Address	0x00	0x05	0x00	Preset ID	SUM
Call Preset	0xFF	Address	0x00	0x07	0x00	Preset ID	SUM
Query Pan Position	0xFF	Address	0x00	0x51	0x00	0x00	SUM
Query Pan Position Response	0xFF	Address	0x00	0x59	Value High Byte	Value Low Byte	SUM
Query Tilt Position	0xFF	Address	0x00	0x53	0x00	0x00	SUM
Query Tilt Position Response	0xFF	Address	0x00	0x5B	Value High Byte	Value Low Byte	SUM
Query Zoom Position	0xFF	Address	0x00	0x55	0x00	0x00	SUM
Query Zoom Position Response	0xFF	Address	0x00	0x5D	Value High Byte	Value Low Byte	SUM

5.3 Pelco-P protocol command list

Function	Byte1	Byte2	Byte3	Byte4	Byte5	Byte6	Byte7	Byte8
Up	0xA0	Address	0x00	0x08	Pan Speed	Tilt Speed	0xAF	XOR
Down	0xA0	Address	0x00	0x10	Pan Speed	Tilt Speed	0xAF	XOR
Left	0xA0	Address	0x00	0x04	Pan Speed	Tilt Speed	0xAF	XOR
Right	0xA0	Address	0x00	0x02	Pan Speed	Tilt Speed	0xAF	XOR
Upleft	0xA0	Address	0x00	0x0C	Pan Speed	Tilt Speed	0xAF	XOR
Upright	0xA0	Address	0x00	0x0A	Pan Speed	Tilt Speed	0xAF	XOR
DownLeft	0xA0	Address	0x00	0x14	Pan Speed	Tilt Speed	0xAF	XOR
DownRight	0xA0	Address	0x00	0x12	Pan Speed	Tilt Speed	0xAF	XOR
Zoom In	0xA0	Address	0x00	0x20	0x00	0x00	0xAF	XOR
Zoom Out	0xA0	Address	0x00	0x40	0x00	0x00	0xAF	XOR
Focus Far	0xA0	Address	0x01	0x00	0x00	0x00	0xAF	XOR
Focus Near	0xA0	Address	0x02	0x00	0x00	0x00	0xAF	XOR
Set Preset	0xA0	Address	0x00	0x03	0x00	Preset ID	0xAF	XOR
Clear Preset	0xA0	Address	0x00	0x05	0x00	Preset ID	0xAF	XOR
Call Preset	0xA0	Address	0x00	0x07	0x00	Preset ID	0xAF	XOR
Query Pan Position	0xA0	Address	0x00	0x51	0x00	0x00	0xAF	XOR
Query Pan Position Response	0xA0	Address	0x00	0x59	Value High Byte	Value Low Byte	0xAF	XOR
Query Tilt Position	0xA0	Address	0x00	0x53	0x00	0x00	0xAF	XOR
Query Tilt Position Response	0xA0	Address	0x00	0x5B	Value High Byte	Value Low Byte	0xAF	XOR
Query Zoom Position	0xA0	Address	0x00	0x55	0x00	0x00	0xAF	XOR
Query Zoom Position Response	0xA0	Address	0x00	0x5D	Value High Byte	Value Low Byte	0xAF	XOR

6. Camera Maintenance and Troubleshooting

6.1 Camera Maintenance

1)If camera is not used for long time,please turn off power adapter switch and AC plug.

2)Use soft cloth or tissue to clean the camera cover.

3)Use soft cloth to clean the lens; Use neuter cleanser if bad smeared. No use strong or corrosive cleanser or corrosive cleanser avoiding scuffing.

6.2 Troubleshooting

1) No video output

—— a,Check whether the camera power supply is connected,the voltage is normal,the power indicator is lit.

b,Whether the machine could do self-inspection after restarted.

c,Check whether the bottom of the DIP switch is the normal operating mode (see Table 2.2 and Table 2.3)

d,Check whether the video output cable or video display is normal

2) No image sometimes

——a,Check whether the video output cable or video display is normal

3) Image dithering when zoom-in or zoom-out

——a,Check whether the camera installation position is solid

b,Whether there is shaking machine or objects around the camera

4) Remote controller can not work

——a,Remote control address is set to 1 (if the machine is set back to the factory defaults,remote control addresses need to be back to 1 too)

b,Check whether the battery is installed on the remote controller or low .

c,Check the camera working mode is the normal operating mode (see Table 2.2 and Table 2.3)

d,Check the menu whether is closed,camera control through remote controller is only available after exiting the menu.If video output from LAN,menu will not be displayed,menu will automatically exists 30s later,then it can be controlled by remote controller.

5) Serial port can not work.

——a,Check whether the camera serial device protocol,baud rate,address is consistent

b,Check whether the control cable is connected properly

c,Check whether the camera working mode is the normal operating mode (see Table 2.2 and Table 2.3)

6) Web pages can not log in

——a,Check whether the camera is showing normally.

b,Check whether the network cable is connected properly(Ethernet port yellow light flashes to indicate normal network cable connection)

c,Check whether your computer is added the segment and the segment is consistent with the IP address of the camera

d,Click "Start" and select "Run" and then type “cmd” in the computer;Click "OK" then turn on a DOS command window to enter ping 192.168.5.163. Press the Enter key to appear message as follows: Description network connection is normal

Copyright Notice:
All the contents of this manual and the copyright ownership belong to the company. Without the approval of the Company,no one can imitate,copy,reproduce or translate arbitrarily.This manual does not have any form of warranty,express or other imply. Specifications and information of this manual mentioned is just for informational purposes,and the content will be updated at any time without notice.
Copyright can not be reproduced.